Discrete Mathematics 348 (2025) 114648

Contents lists available at ScienceDirect

Discrete Mathematics

journal homepage: www.elsevier.com/locate/disc

The forb-flex method for odd coloring and proper conflict-free coloring of planar graphs

James Anderson [a], Herman Chau [b], Eun-Kyung Cho [c], Nicholas Crawford [d], Stephen G. Hartke [d], Emily Heath [e], Owen Henderschedt [f,*], Hyemin Kwon [g], Zhiyuan Zhang [h]

[a] Georgia Institute of Technology, United States of America
[b] University of Washington, United States of America
[c] Hankuk University of Foreign Studies, Korea
[d] University of Colorado Denver, United States of America
[e] California State Polytechnic University Pomona, United States of America
[f] Auburn University, United States of America
[g] Ajou University, South Korea
[h] Toronto Metropolitan University, Canada

ARTICLE INFO

Article history:
Received 12 June 2024
Received in revised form 4 June 2025
Accepted 10 June 2025
Available online 26 June 2025

Keywords:
05C15
Proper conflict-free (pcf) coloring
Odd coloring
Planar graph
Discharging
Girth

ABSTRACT

We introduce a new technique useful for greedy coloring, which we call the forb-flex method, and apply it to odd coloring and proper conflict-free coloring of planar graphs. The odd chromatic number, denoted $\chi_o(G)$, is the smallest number of colors needed to properly color G such that every non-isolated vertex of G has a color appearing an odd number of times in its neighborhood. The proper conflict-free chromatic number, denoted $\chi_{PCF}(G)$, is the smallest number of colors needed to properly color G such that every non-isolated vertex of G has a color appearing uniquely in its neighborhood. Our new technique works by carefully counting the structures in the neighborhood of a vertex and determining if a neighbor of a vertex can be recolored at the end of a greedy coloring process to avoid conflicts. Combining this with the discharging method allows us to prove $\chi_{PCF}(G) \leq 4$ for planar graphs of girth at least 11, and $\chi_o(G) \leq 4$ for planar graphs of girth at least 10. These results improve upon the recent works of Cho, Choi, Kwon, and Park.

© 2025 Elsevier B.V. All rights are reserved, including those for text and data mining, AI training, and similar technologies.

1. Introduction

Introduced recently by Petruševski and Škrekovski [17], an *odd coloring* of a graph G is a proper coloring of G such that every non-isolated vertex has a color which appears an odd number of times in its neighborhood. The *odd chromatic number* of G, denoted by $\chi_o(G)$, is the minimum number of colors needed for an odd coloring of G. In their paper introducing odd coloring, Petruševski and Škrekovski [17] proved $\chi_o(G) \leq 9$ for any planar graph G, and conjectured $\chi_o(G) \leq 5$ (such a bound would be tight, as witnessed by $\chi_o(C_5) = 5$). Since then, odd coloring has received much attention (see for instance [1,2,8,

* Corresponding author.
E-mail addresses: james.anderson@math.gatech.edu (J. Anderson), hchau@uw.edu (H. Chau), ekcho2020@gmail.com (E.-K. Cho), nicholas.2.crawford@ucdenver.edu (N. Crawford), stephen.hartke@ucdenver.edu (S.G. Hartke), eheath@cpp.edu (E. Heath), olh0011@auburn.edu (O. Henderschedt), khmin1121@ajou.ac.kr (H. Kwon), zhiyuan.zhang@torontomu.ca (Z. Zhang).

https://doi.org/10.1016/j.disc.2025.114648
0012-365X/© 2025 Elsevier B.V. All rights are reserved, including those for text and data mining, AI training, and similar technologies.

9,15,16,18,20]). For example, Cranston [8] considered odd colorings of graphs which are sufficiently sparse, as measured by their *maximum average degree*:

$$\mathrm{mad}(G) := \max\left\{\frac{2|E(H)|}{|V(H)|} : H \subseteq G,\ H \neq \emptyset\right\}.$$

He conjectured that every graph G with $\mathrm{mad}(G) \leq \frac{4c-4}{c+1}$ has an odd c-coloring for $c \geq 4$ and confirmed this for $c \in \{5, 6\}$. Cho, Choi, Kwon, and Park [6] resolved this conjecture, showing that it holds for $c \geq 7$ but is false for infinitely many graphs for $c = 4$. In addition, they proved that any graph G with $\mathrm{mad}(G) < \frac{22}{9}$ and no induced 5-cycle has $\chi_o(G) \leq 4$. Since a planar graph G with girth at least g satisfies $\mathrm{mad}(G) < \frac{2g}{g-2}$, this shows that if G is a planar graph with girth at least 11, then $\chi_o(G) \leq 4$.

We improve upon this result by proving the following:

Theorem 1.1. *If G is a planar graph with girth at least* 10*, then* $\chi_o(G) \leq 4$.

We prove a similar result for PCF (proper conflict-free) coloring, from which odd coloring arose as a generalization, defined as follows: a *PCF coloring* of a graph is a proper coloring such that the neighborhood of each non-isolated vertex contains a color that appears exactly once. The PCF chromatic number of G, denoted $\chi_{\mathrm{pcf}}(G)$, is the smallest number of colors used in a PCF coloring of G. Recently introduced by Fabrici, Lužar, Rindošová, and Soták [11], PCF coloring has already garnered much attention. For instance, see [1,3–5,7,10,12–14]. In particular, as PCF coloring lies between a proper coloring of G and its square, $\chi_{\mathrm{pcf}}(G)$ provides lower bounds on $\chi(G^2)$, a quantity of great interest itself (see, for instance, the discussion in [13]).

In the same paper where they introduced PCF coloring, Fabrici, Lužar, Rindošová, and Soták [11] showed $\chi_{\mathrm{pcf}}(G) \leq 8$ and conjectured $\chi_{\mathrm{pcf}}(G) \leq 6$ for any planar graph G. Caro, Petruševski and Škrekovski [3] made progress on this conjecture, showing $\chi_{\mathrm{pcf}}(G) \leq 6$ for planar graphs with girth at least 7. Specifically, they provided sufficient bounds on $\mathrm{mad}(G)$ which guarantees $\chi_{\mathrm{pcf}}(G) \leq c$ for $c \in \{4, 5, 6\}$. These bounds were recently improved by Cho, Choi, Kwon, and Park [4], who showed, among other results, that if G has $\mathrm{mad}(G) < \frac{12}{5}$ and no induced 5-cycle, then $\chi_{\mathrm{pcf}}(G) \leq 4$. Their result implies that any planar graph G with girth at least 12 has $\chi_{\mathrm{pcf}}(G) \leq 4$.

In this paper, we improve upon the above result by showing the following:

Theorem 1.2. *If G is a planar graph with girth at least* 11*, then* $\chi_{\mathrm{pcf}}(G) \leq 4$.

In light of these results, we make the following conjecture.

Conjecture 1.3. *For all planar graphs G with girth at least 6,* $\chi_o(G) \leq \chi_{\mathrm{pcf}}(G) \leq 4$.

If true, the girth condition is tight as witnessed by C_5.

1.1. Paper outline

We note that the proofs of our theorems above do not follow from results about sparse graphs; only the girth conditions on G are used. Our proofs use the method of discharging together with the key technique introduced in this paper. This technique, we call the *forb-flex* method and formally introduce in §4, allows us to efficiently analyze reducible configurations.

Roughly speaking, this method works as follows: letting $u \in V(G)$, where G is a minimum counterexample to, say, Theorem 1.1, we assign a *score* to each neighbor v of u, and let $\mathrm{forb}(u)$ be the sum of these scores. The score of each neighbor v of u is based on the number of colors that we would forbid from coloring u if we wanted to greedily color v followed by u. We simultaneously investigate colors for u that allow a neighbor of u to receive two different colors — we call these flexible colors. The idea is that if u has at least one flexible color that's not forbidden for u, then we can greedily color vertices around u in a way such that one of u's neighbors can be recolored if needed. This extra flexibility allows us to greedily color the neighbors of u without us worrying about u having an odd color — we can simply utilize the flexibility and change the color on the corresponding neighbor of u to give u an odd color if needed.

Analyzing the forb of vertices allows us to consider many structural cases at once, thereby reducing casework significantly. In particular, we show configurations that contain a vertex with low forb are reducible, while configurations with vertices with high forb retain sufficient charge for the discharging argument to go through. We note that while this technique is used closely in conjunction with our discharging rules, its use is not necessarily limited to discharging arguments; indeed, §4 is free of discharging, and one need not have any familiarity with discharging to understand the results in §4.

We now outline the rest of the paper. In §2, we introduce definitions and notation and prove a few basic lemmas. We then focus on Theorem 1.1. In §3, we show reducible configurations that cannot occur in a minimum counterexample to Theorem 1.1. In §4, we introduce the forb-flex method and prove a variety of useful lemmas that show various vertices have high forb. We take advantage of this in section §5, where we prove Theorem 1.1 by using discharging. And finally, in §6, we prove Theorem 1.2 by using similar techniques.

2. Preliminaries

We follow standard graph theory terminology. For any undefined terms, see [21]. For a (partial) proper coloring φ of a graph G and a vertex v, let $\varphi_{\mathsf{o}}(v)$ denote a color that appears an odd number of times in $N(v)$, if it exists. Also, let $\varphi_*(v)$ denote a color that uniquely appears in $N(v)$, if it exists. We say $\varphi_{\mathsf{o}}(v)$ is an *odd color* of v, and $\varphi_*(v)$ is a *unique color* of v. We use $\mathsf{Dom}(\varphi)$ to denote the domain of φ. Note, then, φ is an odd coloring if and only if $\varphi_{\mathsf{o}}(v)$ is defined for all $v \in \mathsf{Dom}(\varphi)$, and similarly φ is a PCF coloring if and only if $\varphi_*(v)$ is defined for all $v \in \mathsf{Dom}(\varphi)$.

Given $n \in \mathbb{N}$, we let $[n] := \{1, 2, \ldots, n\}$. For $k \in \mathbb{N}$, we say v is a *k-vertex*, a *k^+-vertex*, or a *k^--vertex* if $\deg(v) = k$, $\deg(v) \geq k$, or $\deg(v) \leq k$, respectively. We call v an *odd-vertex* if v has an odd degree, and an *even-vertex* if v has an even degree. If $v \in N(u)$ we say v is a k-neighbor, a k^+-neighbor, a k^--neighbor, an even-neighbor, or an odd-neighbor of u, respectively.

By a sequence $j_1^+ - j_2^+ - \cdots - j_k^+$, where $k \in \mathbb{N}$ and $j_1, \ldots, j_k \in \mathbb{N}$, we mean an arbitrary sequence of integers $i_1 - i_2 - \cdots - i_k$ such that $j_n \leq i_n$ for each $1 \leq n \leq k$. For instance, $3^+ - 2 - 2 - 4^+$ represents any sequence of the form $i - 2 - 2 - j$ with $i \geq 3$, $j \geq 4$.

Choose a plane graph G, and let $F(G)$ be the face set of G. For a face $f \in F(G)$, let $\ell(f)$ be the number of edges incident with f. For $k \geq 3$, we say f is a *k-face*, a *k^+-face*, or a *k^--face* if $\ell(f) = k$, $\ell(f) \geq k$, or $\ell(f) \leq k$, respectively.

For $k \geq 1$, a *k-path* is a path $v_1 \cdots v_k$ with k vertices (i.e., it has length $k-1$). Of particular importance in our arguments are paths whose vertices are all of degree 2. To this end, we define the following:

Definition 2.1. Let $k \in \mathbb{N}$ and P be a k-path $v_1 \cdots v_k$ such that $\deg(v_i) = 2$ for $1 \leq i \leq k$. Let u and w be the neighbors of v_1 and v_k not in P. If u, w are 3^+-vertices, then we say P is a *k-thread*, and we call u, w *anchors* of P. We call v_1 and v_k *endpoints* of P. Given an n-thread P, we will say P is a *k^+-thread* (respectively k^--thread) if $n \geq k$ (resp. $n \leq k$).

In our analysis, 2-vertices and 3-vertices have a particularly important role, as they are the only vertices that don't receive a positive initial charge. As such, we introduce additional terminology to refer to certain 2-vertices and 3-vertices based on the degrees of their respective neighbors.

Definition 2.2. Let G be a graph and $v \in V(G)$ be a 2-vertex on a 1-thread (Recall v has no 2^--neighbor). Then v is

- *good* if v has no 3-neighbor,
- *bad* if v has exactly one 3-neighbor,
- *worst* if v has two 3-neighbors.

Definition 2.3. Let G be a graph and $v \in V(G)$ be a 3-vertex with no 1-neighbor. Then v is

- *good* if v has no 2-neighbor,
- *semi-bad* (*s-bad*, for short) if v has exactly one 2-neighbor and no 3-neighbor,
- *bad* if v has exactly one 2-neighbor and exactly one 3-neighbor,
- *worst* if at least two 2-neighbors.

For a face f of a connected plane graph G, its *boundary* is the closed walk containing all vertices bordering f (note that the boundary of a face may not be a cycle, hence the use of the closed walk). We also note that as the walk is closed, the degree sequence of the boundary has an arbitrary starting point.

It will be convenient to describe the boundary degree sequence of a face of a minimum counterexample to Theorem 1.1 and Theorem 1.2 as the concatenation of various subsequences. To this end, we tactically define the following subsequences, which we will call *arrays*.

Definition 2.4. We define six subsequences, which we call *arrays*, as follows:

(1) a_4 is the subsequence $4^+ - 2 - 2 - 2$ of sequence $4^+ - 2 - 2 - 2 - 4^+$,
(2) a_3 is the subsequence $4^+ - 2 - 2$ of sequence $4^+ - 2 - 2 - 4^+$,
(3) a_2^{worst} is the subsequence $3 - 2$ of sequence $3 - 2 - 3$,
(4) a_2^{bad} is the subsequence $3 - 2$ of sequence $3 - 2 - 4^+$, or the subsequence $4^+ - 2$ of the sequence $4^+ - 2 - 3$,
(5) a_2^{good} is the subsequence $4^+ - 2$ of the sequence $4^+ - 2 - 4^+$,
(6) a_1 is the subsequence 3^+ of the sequence $3^+ - 3^+$.

By a_2, we mean one of a_2^{worst}, a_2^{bad}, or a_2^{good}. A closed walk w has an *array representation* if the degree sequence of w can be written using a concatenation of arrays. Given a face f of a connected plane graph, by an *array representation of f* we mean an array representation of its boundary.

For example, if $4^+ - 2 - 2 - 2 - 4 - 2 - 3 - 4^+ - 2 - 2$ is the degree sequence of a closed walk (with the degree of the start/end point written only once), then it has an array representation $a_4 a_2^{\text{bad}} a_1 a_3$. Note that, as a closed walk can have an arbitrary starting point and orientation, it may have more than one array representation.

We will verify in Corollary 3.2 of §3 that each face of a minimum counterexample to Theorem 1.1 has an array representation. Analyzing the array representations will allow us to quickly gain insight into the charge of a face. For instance, after an initial application of discharging rules, particular faces will have negative and nonnegative charges — we call these *poor* and *rich* faces and define them below in terms of their array representations.

Definition 2.5. A face of a connected plane graph is *poor* if its boundary can be represented by a permutation of one of the following:

(1) a_4, a_4, a_1, a_1
(2) $a_4, a_3, a_2^{\text{good}}, a_1$

It is *rich* otherwise.

The following lemma will be used in §5 for the proof of Theorem 1.1.

Lemma 2.6. *Let $n \geq 2$ and X be a multiset of elements in $[n]$. If we change one element x of X into an element in $[n] \setminus \{x\}$, and obtain X', then either X or X' has an element of odd multiplicity.*

Proof. Suppose X does not have an element of odd multiplicity. This means that every element of X appears an even number of times in X. If we change one element $x \in X$ into an element in $[n] \setminus \{x\}$ and obtain X', then x appears an odd number of times in X', satisfying the statement of Lemma 2.6. □

The following lemma will be used in §6 for the proof of Theorem 1.2 and will allow us to utilize the tools developed in §4 for PCF colorings.

Lemma 2.7. *Let G be a graph and φ be a proper coloring of G. Let $v \in V(G)$ be a 2-vertex or 4-vertex. Then v has an odd color if and only if v has a unique color.*

Proof. Suppose v has an odd color under φ, say α. Then as v is a 2-vertex or a 4-vertex, it follows $|\{u \in N(v) : \varphi(u) = \alpha\}|$ is either 1 or 3. In the former case, α is a unique color of v. In the later case, v is a 4-vertex, and thus there exists $w \in N(v)$ such that $\varphi(w) \neq \alpha$. Then $\varphi(w)$ is a unique color of v. The other direction is trivial. □

3. Reducible configurations for Theorem 1.1

In this section we prove that a minimum counterexample to Theorem 1.1 cannot contain various structures, which we call *reducible configurations*. Throughout this section, we use terminology from §2, and we suppose that Theorem 1.1 is false and let G be a counterexample to Theorem 1.1 such that $|V(G)|$ is minimal. Clearly, G is connected, as otherwise, there is some connected component of G that is a smaller counterexample.

Many of our proofs will follow the framework of deleting certain vertices from G, taking an odd coloring of the resulting graph, and then extending the coloring to all G, thereby reaching a contradiction. For statements concerning faces, it will often be useful to write the structures in terms of arrays.

The observation below follows from claims 5.1, 5.2, and 5.3 in [6]. While these claims are for a graph G that is a minimal counterexample to the statement that all planar graphs with girth at least 11 have $\chi_o(G) \leq 4$, the proof of these claims do not use the girth condition. Thus the statements are true for a minimal counterexample G to Theorem 1.1 as well.

Observation 3.1. *The following hold for G:*

(1) G has no 1-vertex.
(2) G has no 4^+-thread.
(3) G has no odd-vertex which anchors a 2^+-thread.
(4) Let v be a 4^+-vertex of G. If v has an odd degree, then the number of 2-vertices on a thread anchored by v is at most $\deg_G(v)$. If v has an even degree, then the number of 2-vertices on a thread anchored by v is at most $3\deg_G(v) - 5$.

As G is connected, every face has a boundary. The following corollary shows the boundary can always be written in terms of arrays.

Corollary 3.2. *The boundary of every face of G has an array representation.*

Proof. By (1) of Observation 3.1, the degree sequence of any face boundary never contains 1. By (2), the degree sequence of any face boundary does not contain the subsequence $2-2-2-2$. By (3), the degree sequence of any face boundary does not contain the subsequence $3-2-2$. Therefore, the only subsequences the degree sequence of a face boundary can contain are exactly the arrays as defined in Definition 2.4. Thus the degree sequence of every face boundary can be written as a concatenation of arrays. □

Observation 3.3. *No 2-vertex of G is a cut vertex.*

Proof. Suppose for contradiction that v is a cut vertex of G with $\deg(v)=2$. Let $N(v)=\{x_1,x_2\}$. Let φ be an odd 4-coloring of $G-v$ and let C_1 and C_2 be the components of $G-v$ containing x_1 and x_2 respectively. Since C_1 and C_2 are disconnected, we can permute the colors on each component independently such that $\varphi_o(x_1)=1$, $\varphi(x_1)=2$, $\varphi_o(x_2)=1$, and $\varphi(x_2)=3$. We can then color $\varphi(v)=4$, which extends φ to G and it is a contradiction. □

Observation 3.4. *Let x_1x_2 be a 2-thread with anchors y_1 and y_2, respectively. Let φ be an odd 4-coloring of $G-\{x_1,x_2\}$. If φ cannot be extended to G, then $\varphi(y_1)\neq\varphi(y_2)$ and $\varphi_o(y_1)=\varphi_o(y_2)$.*

Proof. Let $y_1x_1x_2y_2$ be as defined and let φ be an odd 4-coloring of $G-\{x_1,x_2\}$. Suppose for contradiction that either $\varphi(y_1)=\varphi(y_2)$ or $\varphi_o(y_1)\neq\varphi_o(y_2)$. Extend the coloring φ by first coloring $\varphi(x_1)\in[4]\setminus\{\varphi_o(y_1),\varphi(y_1),\varphi(y_2)\}$. Now consider the set $S=\{\varphi(x_1),\varphi_o(y_2),\varphi(y_1),\varphi(y_2)\}$. If $\varphi(y_1)=\varphi(y_2)$, then $|S|\le 3$ and we can finish extending φ to G by coloring $\varphi(x_2)\in[4]\setminus S$, which is a contradiction. Similarly, if $\varphi_o(y_2)=\varphi(y_1)$, then $|S|\le 3$ and again we may extend φ to G.

Otherwise, we have $\varphi(y_1)\neq\varphi(y_2)$ and $\varphi_o(y_2)\neq\varphi(y_1)$. By the hypothesis, either $\varphi(y_1)=\varphi(y_2)$ or $\varphi_o(y_1)\neq\varphi_o(y_2)$. Since $\varphi(y_1)\neq\varphi(y_2)$, it follows that $\varphi_o(y_1)\neq\varphi_o(y_2)$. Clearly, we also have $\varphi_o(y_2)\neq\varphi(y_2)$. Thus, it follows that $\varphi_o(y_2)\in[4]\setminus\{\varphi_o(y_1),\varphi(y_1),\varphi(y_2)\}$. Therefore, we can color $\varphi(x_1)=\varphi_o(y_2)$ so that $|S|\le 3$. Thus, we can color $\varphi(x_2)=\varphi_o(y_1)$, extending φ to G. □

Observation 3.5. *Let $x_1x_2x_3$ be a 3-thread with anchors y_1 and y_2. Let φ be an odd 4-coloring of $G-\{x_1,x_2,x_3\}$. If φ cannot be extended to G, then $\varphi_o(y_1)=\varphi(y_2)$ and $\varphi_o(y_2)=\varphi(y_1)$.*

Proof. Let $y_1x_1x_2x_3y_2$ be as defined and let φ be an odd 4-coloring of $G-\{x_1,x_2,x_3\}$. Suppose for contradiction that $\varphi_o(y_1)=\varphi(y_2)$ or $\varphi_o(y_2)=\varphi(y_1)$. If $\varphi_o(y_1)\neq\varphi(y_2)$, then we can extend φ by coloring $\varphi(x_2)=\varphi_o(y_1)$, coloring $\varphi(x_3)\in[4]\setminus\{\varphi(x_2),\varphi(y_2),\varphi_o(y_2)\}$, and coloring $\varphi(x_1)\in[4]\setminus\{\varphi(x_2),\varphi(x_3),\varphi(y_1),\varphi_o(y_1)\}$, which is a contradiction. The coloring for x_1 is possible because $\varphi(x_2)=\varphi_o(y_1)$ so $|\{\varphi(x_2),\varphi(x_3),\varphi(y_1),\varphi_o(y_1)\}|\le 3$. A symmetric argument applies if $\varphi_o(y_2)\neq\varphi(y_1)$. □

Observation 3.6. *Every 3-vertex in G has a 4^+-neighbor of even degree.*

Proof. Suppose for contradiction that $u\in V(G)$ is a 3-vertex with only 2-neighbors and odd-neighbors. Let X be the set of 2-neighbors of u, $G'=G-(X\cup\{u\})$, and φ be an odd 4-coloring of G'. Consider the set of vertices $S=\bigcup_{v\in X\cup\{u\}}N_{G'}(v)$ and the set of colors $C=\{\varphi(v):v\in S\}$. Since $\deg_G(u)=3$, $|S|\le 3$ and hence $|C|\le 3$. Extend φ to G by first coloring $\varphi(u)\in[4]\setminus C$. Then for each $v\in X$, let $N_G(v)=\{u,w\}$ and extend φ by coloring $\varphi(v)\in[4]\setminus\{\varphi(u),\varphi(w),\varphi_o(w)\}$. This yields an odd 4-coloring of G, which is a contradiction. □

Observation 3.7. *G has no path $v_1v_2v_3v_4v_5$ where $\deg(v_1)$ is odd and $\deg(v_2)=\deg(v_4)=\deg(v_5)=2$.*

Proof. Suppose for contradiction that G contains a path $v_1v_2v_3v_4v_5$ where $\deg(v_1)$ is odd and $\deg(v_2)=\deg(v_4)=\deg(v_5)=2$. By Observation 3.1(3) v_3 is an even-vertex. Since v_4 and v_5 are 2-vertices, they are part of either a 2-thread or a 3-thread. Let the thread be P with anchors v_3 and w and let φ be an odd 4-coloring of $G'=G-V(P)$.

Observe that $\deg_{G'}(v_1)$ and $\deg_{G'}(v_3)$ are odd, so recoloring v_2 to a color in $[4]\setminus\{\varphi(v_1),\varphi(v_3)\}$ still yields an odd 4-coloring of G'. At least one of the recolorings avoids the situation in Observation 3.4 and Observation 3.5 and therefore φ can be extended to an odd 4-coloring of G, which is a contradiction. □

Corollary 3.8. *No face of G has an array representation containing $a_2^{\text{bad}}a_3$, $a_3a_2^{\text{bad}}$, $a_2^{\text{bad}}a_4$, or $a_4a_2^{\text{bad}}$ as a subsequence.*

Proof. If a face of G were to have any of these as a subsequence, then G would have a path with degree sequence $3-2-4^+-2-2$. But by Observation 3.7, this cannot occur. □

Lemma 3.9. *Any cycle of G whose array representation contains a_4 also contains a_1 or a_2.*

Proof. Suppose for contradiction that G contains a cycle $C = v_1v_2\cdots v_n$ whose array representation contains a_4 but no a_1 nor a_2. Without loss of generality suppose $v_1v_2v_3v_4$ has degree sequence a_4 $(4^+ - 2 - 2 - 2)$. Let $G' = G - S$ where $S = \{v_i \in C : \deg(v_i) = 2\}$ and let φ be an odd 4-coloring of G'. We will greedily extend φ to a coloring of G.

By Observation 3.1(3), $\deg_G(v_1)$ is even. Since a_1 does not appear in any array representation of C, $\deg_G(v_n) = 2$. Hence, $\deg_{G'}(v_1) = \deg_G(v_1) - 2$ so $\deg_{G'}(v_1)$ is also even. Therefore, there exist distinct odd colors α, β of v_1 under φ.

First, extend φ by setting v_2 to a color in $[4] \setminus \{\varphi(v_1), \alpha, \beta\}$. Until φ is extended to all of G, choose the vertex $v_i \in S$ with smallest index i such that φ is not extended to v_i and color it

$$\varphi(v_i) \in \begin{cases} [4] \setminus \{\varphi(v_{i-1}), \varphi_o(v_{i-1})\} & \text{if } v_{i+1}, v_{i+2} \in S, \\ [4] \setminus \{\varphi(v_{i-1}), \varphi_o(v_{i-1}), \varphi(v_{i+1})\} & \text{if } v_{i+1} \notin S, v_{i+2} \in S, \\ [4] \setminus \{\varphi(v_{i-1}), \varphi_o(v_{i-1}), \varphi(v_{i+2})\} & \text{if } v_{i+2} \notin S. \end{cases}$$

This is well-defined because no array representation of C contains a_1, so at most one of v_{i+1} and v_{i+2} does not lie in S. It is clear that this iterative process leads to a proper coloring of G. Since no array representation of C has an a_2, our process leads to each vertex in S having an odd color.

Suppose $v_i \in C \setminus S$ and $i \neq 1$. Immediately after coloring v_{i-1} in the above process, v_i may not have an odd color. If this is the case, then it will have an odd color after coloring v_{i+1}. If v_i does have an odd color after coloring v_{i-1}, then the above process avoids $\varphi_o(v_i)$ when coloring v_{i+1} so v_i continues to have an odd color.

Finally, consider v_1. The two colors α and β are odd colors for v_1 prior to coloring any vertex in S. Since $\varphi(v_2)$ is neither α nor β, no matter what v_n is colored, at least one of α or β remains an odd color of $\varphi(v_1)$. Thus, we have extended φ to an odd 4-coloring of G which is a contradiction. □

Corollary 3.10. *Let f be a face of G. Then any array representation of f which contains a_4 also contains a_1 or a_2.*

Proof. Suppose for contradiction that f is a face whose array representation contains a_4 but not a_1 nor a_2. Then f must contain a cycle whose array representation contains a_4 but not a_2 nor a_1, which cannot occur by Lemma 3.9. □

Observation 3.11. *G contains no 10-face with degree sequence $3^+ - 2 - 2^+ - 2 - 3^+ - 2 - 3^+ - 2 - 2 - 2$.*

Proof. Suppose for contradiction that G contains a 10-face $v_1y_1v_2y_2v_3y_3v_4x_1x_2x_3v_1$ where $\deg(y_i) = \deg(x_i) = 2$ for all $i \in [3]$. Since the girth of G is at least 10, the boundary of this face is a cycle and the incident vertices are distinct. Let $G' = G - \{x_1, x_2, x_3\}$. By the minimality of G, there is φ an odd 4-coloring of G'. Since we cannot extend φ to G, by Observation 3.5, we may assume $\varphi(v_1) = \varphi_o(v_4) = 1$, $\varphi(v_4) = \varphi_o(v_1) = 2$, and 2 and 1 are unique odd colors of v_1 and v_4, respectively. Our goal is to recolor y_i's under φ so that we obtain an odd 4-coloring φ of G' such that $\varphi(v_4) = 2$, but $\varphi_o(v_1) \neq 2$. Then by Observation 3.5, we can extend φ to G, which is a contradiction.

Let us recolor y_1 under φ with a color in $[4] \setminus \{1, 2, \varphi(v_2)\}$. Since v_1 is an odd-vertex, $\varphi_o(v_1)$ is guaranteed, and $\varphi_o(v_1) \neq 2$. If $\varphi_o(v_2)$ exists, then φ is an odd 4-coloring of G', which we desired. If $\varphi_o(v_2)$ does not exist, then we recolor y_2 under φ with a color in $[4] \setminus \{\varphi(v_2), \varphi(y_2), \varphi(v_3)\}$. Then by Lemma 2.6, $\varphi_o(v_2)$ exists. If $\varphi_o(v_3)$ exists, then φ is an odd 4-coloring of G', which we desired. If $\varphi_o(v_3)$ does not exist, then we recolor y_3 under φ with a color in $[4] \setminus \{\varphi(v_3), \varphi(y_3), \varphi(v_4)\}$. Then by Lemma 2.6, $\varphi_o(v_3)$ exists. Now, $\varphi_o(v_4)$ is always guaranteed since v_4 is an odd-vertex. Thus, φ is an odd 4-coloring of G', which we desired. This is a contradiction. □

Observation 3.11 implies the immediate corollary in terms of arrays.

Corollary 3.12. *G contains no face with array representations $a_4a_2^{\text{good}}a_2^{\text{good}}a_2^{\text{good}}$ or $a_4a_4a_2^{\text{good}}$.*

4. The forb-flex method

In this section we introduce the forb-flex method. We will primarily use it in the context of odd coloring to find many reducible configurations that cannot occur in a minimum counterexample to Theorem 1.1. This tool works by analyzing the structure of the neighborhood of a vertex and assigning to each structure a score based on how many colors it prevents a vertex from receiving. To this end, for a graph G and $u \in V(G)$, we will partition $N(u)$ into 9 types of vertices. Note that we use terminology defined in §2.

Definition 4.1. Let G be a graph and $u \in V(G)$. Then $v \in N(u)$ is a:

t_i-*neighbor* if v is the endpoint of an i-thread, for $i \in \{1, 2, 3\}$,
t_{good}-*neighbor* if v is a good 3-vertex,
$t_{\text{s-bad}}$-*neighbor* if v is a semi-bad 3-vertex,
t_{bad}-*neighbor* if v is a bad 3-vertex,

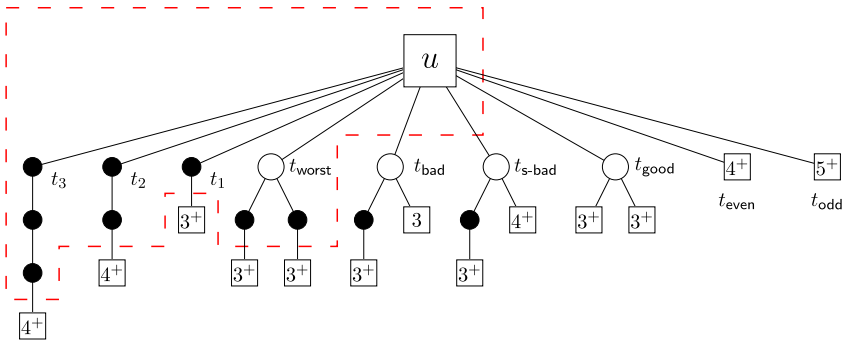

Fig. 1. Illustration of the 9 neighbor types of u together with $S[u]$ in red-dashed. Note that by Observation 3.1(3), the anchors of the 2^+-threads are 4^+-vertices, and the t_{worst}-, t_{bad}-, $t_{\text{s-bad}}$-, t_{good}-neighbors of u are not anchors of 2^+-threads. (For interpretation of the colors in the figure(s), the reader is referred to the web version of this article.)

t_{worst}-*neighbor* if v is a worst 3-vertex,
t_{even}-*neighbor* if v is an even 4^+-vertex,
t_{odd}-*neighbor* if v is an odd 5^+-vertex.

Many of our proofs will require us to consider the resulting graph formed from deleting a vertex u and certain vertices near u. Therefore, we define the following:

Definition 4.2. For a graph G and vertex $u \in V(G)$, define:

$$S[u] := \{u\} \cup \{v \in V(G) : v \text{ is on a thread anchored by } u\}$$
$$\cup \{w \in N[v] : v \text{ is a } t_{\text{worst}}\text{-neighbor of } u\}.$$

See Fig. 1 for an example.

The strategy in our proofs will be to take a minimum counterexample G to Theorem 1.1 and consider the graph $G - S[u]$ for a particular choice of u. We then fix an odd 4-coloring φ on $G - S[u]$ and attempt to extend this coloring to all of G. The key will be in choosing the right color for u. For instance, u cannot receive the color of any of its neighbors, or the potentially only odd color of one of its even-neighbors (note that an odd-vertex always has an odd color in any proper coloring). We will strategically choose a color for u such that, if necessary, one of its neighbors can be safely switched to another color. To this end, we determine the situations under which a neighbor of u can switch colors.

For instance, for a k-thread $v_1 \cdots v_k$ with anchors u and w, where $\varphi(w) = i$ and $\varphi_o(w) = j$ are given, certain color choices for u give one and only one way to color $v_1 \cdots v_k$ while maintaining the odd constraint for all vertices except u. For example, if uv_1w is a 1-thread with anchors u and w, and $\varphi(w) = 1, \varphi_o(w) = 2$, and $\varphi(u) = 3$, then v_1 must be colored $\varphi(v_1) = 4$. Other color choices for u however allow flexibility for the color which v_1 receives, guaranteeing us an odd color for u by Lemma 2.6. In the example above, if $\varphi(w) = 1$, $\varphi_o(w) = 2$, and $\varphi(u) = 2$, then one can color $\varphi(v_1) \in \{3, 4\}$, whichever one will give u an odd color. This motivates the following definitions.

Definition 4.3. Let G be a graph. Let P be a k-thread $v_1 \cdots v_k$ where $k \in [3]$ with anchors u and w (where $u \in N(v_1)$, and $u \neq w$). Let φ be a partial proper coloring of G that includes u and w such that $\varphi_o(w)$ exists, and, furthermore, if $\varphi(v_k)$ is defined, then $\varphi_o(w) \neq \varphi(v_k)$. Then P is (u, φ)-*flexible* if

(1) P is a 1-thread and $\varphi(u) = \varphi_o(w)$,
(2) P is a 2-thread and either $\varphi(u) = \varphi(w)$ or $\varphi(u) = \varphi_o(w)$, or
(3) P is a 3-thread and $\varphi(u) \neq \varphi_o(w)$.

The next lemma says that when P is (u, φ)-flexible, there exists two ways to extend or recolor φ on P which differ at v_1. This guarantees that no matter how φ is extended, we can recolor P to guarantee u has an odd color.

Lemma 4.4. *Let G, P, and φ be as described in Definition 4.3, with P (u, φ)-flexible. Then there exists two proper colorings φ' and φ'' of $\mathsf{Dom}(\varphi) \cup P$ such that*

(1) $\varphi(x) = \varphi'(x) = \varphi''(x)$ for all $x \in \mathsf{Dom}(\varphi) \setminus P$.
(2) For all $x \in P \cup \{w\}$, $\varphi'_o(x)$ and $\varphi''_o(x)$ exist.

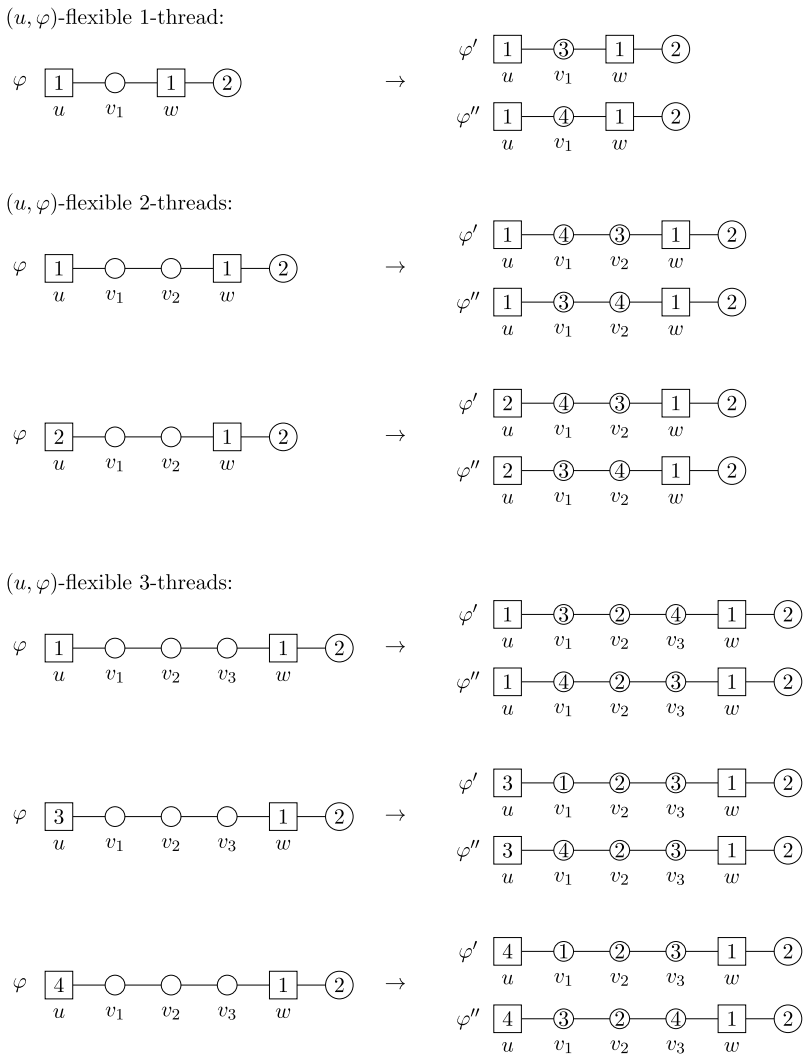

Fig. 2. Flexible tuples up to relabeling of the colors.

(3) $\varphi'(v_1) \neq \varphi''(v_1)$.

Proof. Start by taking φ' and φ'' to simply be φ restricted to $\mathsf{Dom}(\varphi) \setminus P$.

If P is a 1-thread, then as P is (u,φ)-flexible, it follows $\varphi(u) = \varphi_{\mathsf{o}}(w)$, and thus there exists two colors α and β in $[4] \setminus \{\varphi(u), \varphi(w), \varphi_{\mathsf{o}}(w)\}$. Setting $\varphi'(v_1) = \alpha$ and $\varphi''(v_2) = \beta$ gives the desired colorings.

If P is a 2-thread, then as P is (u,φ)-flexible, either $\varphi(u) = \varphi(w)$ or $\varphi(u) = \varphi_{\mathsf{o}}(w)$. In both cases, there exists two colors in $[4] \setminus \{\varphi(u), \varphi(w), \varphi_{\mathsf{o}}(w)\}$, say α and β. Set $\varphi'(v_1) = \alpha$, $\varphi'(v_2) = \beta$, and $\varphi''(v_1) = \beta$, $\varphi''(v_2) = \alpha$. This gives the desired colorings.

If P is a 3-thread, then we define the colorings as follows: set $\varphi'(v_2) = \varphi''(v_2) = \varphi_{\mathsf{o}}(w)$. Then there exists 2 colors, α and β, in $[4] \setminus \{\varphi(w), \varphi_{\mathsf{o}}(w), \varphi(v_2)\}$. Set $\varphi'(v_1) = \alpha$, $\varphi'(v_3) = \beta$, and set $\varphi''(v_1) = \beta$, $\varphi''(v_3) = \alpha$. This gives the desired colorings. $\square$

These possibilities are illustrated in Fig. 2.

Definition 4.5. Let G be a graph, $u \in V(G)$, and φ be a partial proper 4-coloring of $G - \{u\}$. Then

$$\mathrm{Flex}_G(u,\varphi) := \{\alpha \in [4] : \text{if } \varphi(u) \text{ is set to } \alpha, \text{ then } P \text{ is } (u,\varphi)\text{-flexible for some } P \text{ anchored by } u\}.$$

When G is clear from context, we will simply write $\mathrm{Flex}(u,\varphi)$.

It is easy to see that if P is (u,φ)-flexible, and P is a k-thread, then there are at least k colors in $\mathrm{Flex}(u,\varphi)$. This motivates the following definition:

Definition 4.6. Let G be a graph. The *flexible number* of a vertex $u \in V(G)$ is given by

$$\mathrm{flex}_G(u) = \max\{k : k \in \{1,2,3\},\ u \text{ has a } t_k\text{-neighbor}\}.$$

When G is clear from context, we will write $\mathrm{flex}(u)$.

As mentioned above, in our proofs we will be mostly concerned with extending a coloring of $G - S[u]$ to all of G, for some vertex u. To do so, we must consider the colors which we do not want to color u, as these colors would create a conflict. This motivates the following definition:

Definition 4.7. Let G be a graph, $u \in V(G)$, and φ be a partial proper coloring of G. We define the *forbidden color set* of u with respect to φ as

$$\begin{aligned}\mathrm{Forb}_G(u,\varphi) := {} & \{\varphi(x) : x \in N(u) \text{ and } \varphi(x) \text{ is defined}\} \\ & \cup \{\varphi_{\mathrm{o}}(x) : x \in N(u), \deg(x) \text{ is even}, x \text{ does not anchor an } (x,\varphi)\text{-flexible thread}, \\ & \qquad \text{and } \varphi_{\mathrm{o}}(x) \text{ is defined.}\} \\ & \cup \{\varphi(w) : w \neq u,\ u \text{ and } w \text{ anchor a common 1-thread, and } \varphi(w) \text{ is defined}\}.\end{aligned}$$

When G is clear from context we simply write $\mathrm{Forb}(u,\varphi)$.

Lemma 4.8. *Let G be a graph of girth at least 10, $u \in V(G)$, and φ be an odd 4-coloring of $G - S[u]$. If $|\mathrm{Flex}(u,\varphi)| > |\mathrm{Forb}(u,\varphi)|$, then there exists an odd 4-coloring φ' of G such that every (u,φ)-flexible thread is (u,φ')-flexible.*

Proof. Let $\varphi^0 = \varphi$. Since $|\mathrm{Flex}(u,\varphi)| > |\mathrm{Forb}(u,\varphi)|$, there exists $\alpha \in \mathrm{Flex}(u,\varphi) \setminus \mathrm{Forb}(u,\varphi)$. First extend φ by coloring u the color α. Let P be the (u,φ)-flexible thread, and let v be the neighbor of u on P. Next extend φ by coloring the vertices in $S[u] \setminus V(P)$, one at a time, updating φ at each step, according to the following rules: for each $x \in (N(u) \cap S[u]) \setminus \{v\}$,

- **Rule 1:** *x is a t_1-neighbor of u.* Then x is on a 1-thread whose anchors are u and w for some $w \in V(G)$. Color x any color in $[4] \setminus \{\alpha, \varphi(w), \varphi_{\mathrm{o}}(w)\}$ (or, any color in $[4] \setminus \{\alpha, \varphi(w)\}$ if $\varphi_{\mathrm{o}}(w)$ does not exist).
- **Rule 2:** *x is a t_2-neighbor of u.* Then x is on a 2-thread, xy with anchors $u \in N(x)$ and $w \in N(y)$ for some $y, w \in V(G)$. Extend φ by setting $\varphi(y)$ to any color in $[4] \setminus \{\alpha, \varphi(w), \varphi_{\mathrm{o}}(w)\}$ (or $[4] \setminus \{\alpha, \varphi(w)\}$ if $\varphi_{\mathrm{o}}(w)$ does not exist), then color x using any color in $[4] \setminus \{\alpha, \varphi(y), \varphi(w)\}$.
- **Rule 3:** *x is a t_3-neighbor of u.* Then x is on a 3-thread xyz with anchors $u \in N(x)$ and $w \in N(z)$ for some $y, z, w \in V(G)$. Extend φ by setting $\varphi(z)$ to any color in $[4] \setminus \{\varphi(w), \varphi_{\mathrm{o}}(w)\}$ (or $[4] \setminus \{\varphi(w)\}$ if $\varphi_{\mathrm{o}}(w)$ does not exist), and then setting $\varphi(y)$ to any color in $[4] \setminus \{\alpha, \varphi(z), \varphi(w)\}$. Then color x any color in $[4] \setminus \{\alpha, \varphi(y), \varphi(z)\}$.
- **Rule 4:** *x is a t_{worst}-neighbor of u.* Let $y_1, y_2, w_1, w_2 \in V(G)$ witness x is a t_{worst}-neighbor where $y_1, y_2 \in N(x)$, $y_1w_1, y_2w_2 \in E(G)$. Color x using any color in $[4] \setminus \{\alpha, \varphi(w_1), \varphi(w_2)\}$. Then for each $i \in [2]$, color y_i using any color in $[4] \setminus \{\varphi(x), \varphi(w_i), \varphi_{\mathrm{o}}(w_i)\}$ (or $[4] \setminus \{\varphi(x), \varphi(w_i)\}$ if $\varphi_{\mathrm{o}}(w_i)$ does not exist).

Note that as P is (u,φ^0)-flexible, it is (u,φ)-flexible, and thus there are two extensions of φ to a proper coloring of G by Lemma 4.4. Note that v has different colors in each coloring by Lemma 4.4(3) and so an odd color of u exists under at least one of these extensions by Lemma 2.6. Thus we choose the extension of φ so that an odd color of u exists. Now all of G is colored, and every vertex has an odd color except possibly for neighbors w of u which anchor (w,φ)-flexible threads. For each such neighbor w of u, we choose a (w,φ)-flexible thread P_w and recolor P_w by Lemma 4.4 so that an odd color of w exists. Note that recoloring P_w does not change any odd color of vertices other than w since G has girth at least 10. The result is an odd 4-coloring φ' of G. Since for each (u,φ^0)-flexible thread P, we did not change the color or odd color of the other anchor $w \neq u$ of P, it follows any (u,φ_0)-flexible thread of G is also (u,φ')-flexible. □

In order to avoid looking at all possible colorings of $G - S[u]$ and all the possible sets of forbidden colors, we give an upper and lower bound on the size of $\mathrm{Forb}(u,\varphi)$ and $\mathrm{Flex}(u,\varphi)$.

Definition 4.9. Let G be a graph, and $u \in V(G)$ with $v \in N_G(u)$. Then v's *score relative to* u, denoted $s_u(v)$, is defined as

$$s_u(v) = \begin{cases} 0 & \text{if } v \text{ is a } t_2\text{-, } t_3\text{-, or } t_{\mathsf{worst}}\text{-neighbor of } u, \\ 1 & \text{if } v \text{ is a } t_1\text{-, } t_{\mathsf{good}}\text{-, } t_{\mathsf{s\text{-}bad}}\text{-, } t_{\mathsf{bad}}\text{-, or } t_{\mathsf{odd}}\text{-neighbor of } u, \\ 2 & \text{if } v \text{ is a } t_{\mathsf{even}}\text{-neighbor of } u. \end{cases}$$

For simplicity, we write $s(v)$ when u is clear from context.

Definition 4.10. Let G be a graph. The *forbidden number* of a vertex $u \in V(G)$ is given by

$$\mathrm{forb}_G(u) = \sum_{v \in N_G(u)} s_u(v).$$

When G is clear from context, we write $\mathrm{forb}(G)$.

It is worth noting that the score of each neighbor of u is precisely the number of colors which possibly contribute to $\mathrm{Forb}(u, \varphi)$. Hence

$$\mathrm{forb}(u) \geq \max\{|\mathrm{Forb}(u, \varphi)| : \varphi \text{ is an odd 4-coloring of } G - S[u]\}.$$

Since each i-thread contributes i colors to $\mathrm{Flex}(u, \varphi)$, it follows

$$\mathrm{flex}(u) \leq \min\{|\mathrm{Flex}(u, \varphi)| : \varphi \text{ is an odd 4-coloring of } G - S[u]\}.$$

At this point let G be a minimum counterexample (with respect to $|V(G)|$) to Theorem 1.1. We now prove a number of lemmas about the flexible and forbidden number of vertices of G.

Corollary 4.11. *G contains no vertex u with* $\mathrm{flex}(u) > \mathrm{forb}(u)$.

Proof. Suppose for contradiction that there exists $u \in V(G)$ with $\mathrm{flex}(u) > \mathrm{forb}(u)$. Let φ be an odd 4-coloring of $G - S[u]$. Then

$$|\mathrm{Flex}(u, \varphi)| \geq \mathrm{flex}(u) > \mathrm{forb}(u) \geq |\mathrm{Forb}(u, \varphi)|.$$

Applying Lemma 4.8 shows an odd 4-coloring of G exists, contradicting that G is a minimum counterexample to Theorem 1.1. □

Corollary 4.12. *If $u \in V(G)$ has a t_i-neighbor, then* $\mathrm{forb}(u) \geq i$ *for* $i \in \{1, 2, 3\}$.

Proof. Since u has a t_i-neighbor, $\mathrm{flex}(u) \geq i$. By Corollary 4.11, $\mathrm{forb}(u) \geq \mathrm{flex}(u) \geq i$. □

Lemma 4.13. *Let u_1 and u_2 be adjacent 4^+-vertices in G. If u_1 has a t_i-neighbor and u_2 has a t_j-neighbor where $i, j \in [3]$, then* $\mathrm{forb}(u_1) + \mathrm{forb}(u_2) \geq i + j + 2$.

Proof. Since G has girth at least 10, it follows $S[u_1]$ and $S[u_2]$ are pairwise disjoint. Let P_i and P_j be i- and j-threads anchored by u_1 and u_2 respectively. By Corollary 4.12, $\mathrm{forb}_G(u_1) \geq i$ and $\mathrm{forb}_G(u_2) \geq j$. Suppose for contradiction that $\mathrm{forb}_G(u_1) + \mathrm{forb}_G(u_2) \leq i + j + 1$. Then, without loss of generality, we may let $\mathrm{forb}_G(u_1) \leq i + 1$ and $\mathrm{forb}_G(u_2) \leq j$.

Let $G_0 := G - (S[u_1] \cup S[u_2])$, and let $G_1 := G - S[u_2]$. Thus, $G_0 = G_1 - S[u_1]$. Let φ^0 be an odd 4-coloring of G_0. Note that as $u_2 \notin G_1$, it follows

$$|\mathrm{Forb}_{G_1}(u_1, \varphi^0)| \leq \sum_{v \in N_{G_1}(u_1)} s(v) \leq \sum_{v \in N_G(u_1) \setminus \{u_2\}} s(v) = \sum_{v \in N_G(u_1)} s(v) - 2 = \mathrm{forb}_G(u_1) - 2 \leq i - 1.$$

Note that $\mathrm{flex}_{G_1}(u_1) \geq i$, and so $|\mathrm{Flex}_{G_1}(u_1, \varphi^0)| > |\mathrm{Forb}_{G_1}(u_1, \varphi^0)|$. By Lemma 4.8, there exists an odd 4-coloring φ^1 of G_1 where P_i is (u, φ^1)-flexible (in G_1 and thus in G).

Now, as P_i is (u, φ^1)-flexible in G, it follows u_1 contributes at most one color to $\mathrm{Forb}_G(u_2, \varphi^1)$, i.e., $\varphi^1_o(u_1) \notin \mathrm{Forb}_G(u_2, \varphi^1)$. Thus

$$|\mathrm{Forb}_G(u_2, \varphi^1)| \leq \sum_{v \in N_G(u_2) \setminus \{u_1\}} s(v) + 1 \leq \sum_{v \in N_G(u_2)} s(v) - 2 + 1 = \mathrm{forb}(u_2) - 2 + 1 \leq j - 1.$$

Since $\mathrm{flex}_G(u_2) \geq j$, $|\mathrm{Flex}_G(u_2, \varphi^1)| > |\mathrm{Forb}_G(u_2, \varphi^1)|$. Thus by Lemma 4.8, there exists an odd 4-coloring φ_2 of G, contradicting that G is a minimum counterexample. □

Lemma 4.14. *Let uvw be a 3-path of 4^+-vertices in G. If u has a t_i-neighbor, v has a t_j-neighbor, and w has a t_k-neighbor where $i, j, k \in [3]$, then* $\mathrm{forb}(u) + \mathrm{forb}(v) + \mathrm{forb}(w) \geq i + j + k + 4$.

Proof. Since G has girth at least 10, it follows $S[u]$, $S[v]$, $S[w]$ are pairwise disjoint. By Corollary 4.12, $\mathrm{forb}(u) \geq i$, $\mathrm{forb}(v) \geq j$, and $\mathrm{forb}(w) \geq k$. By Lemma 4.13, $\mathrm{forb}(u) + \mathrm{forb}(v) \geq i + j + 2$ and $\mathrm{forb}(v) + \mathrm{forb}(w) \geq j + k + 2$. Suppose for contradiction that $\mathrm{forb}(u) + \mathrm{forb}(v) + \mathrm{forb}(w) \leq i + j + k + 3$. Then $\mathrm{forb}(u) \leq i + 1$, $\mathrm{forb}(v) \leq j + 3$, and $\mathrm{forb}(w) \leq k + 1$. Thus $\mathrm{forb}(u) \in \{i, i+1\}$, $\mathrm{forb}(w) \in \{k, k+1\}$ so that without loss of generality, there are three cases.

Suppose $\mathrm{forb}(u) = i$, $\mathrm{forb}(v) \leq j + 3$, and $\mathrm{forb}(w) = k$. Let $G_0 := G - (S[u] \cup S[v] \cup S[w])$, $G_1 := G - (S[u] \cup S[w])$, $G_2 := G - S[w]$. Let φ^0 be an odd 4-coloring of G_0. Since $u, w \notin G_1$, we have

$$|\mathrm{Forb}_{G_1}(v, \varphi^0)| \leq \sum_{x \in N_{G_1}} s(x) \leq \sum_{x \in N_G(v) \setminus \{u,w\}} s(x) \leq \mathrm{forb}_G(v) - 4 \leq j - 1.$$

Since $\mathrm{flex}_{G_1}(v) \geq j$, it follows $|\mathrm{Flex}_{G_1}(v, \varphi^0)| > |\mathrm{Forb}_{G_1}(v, \varphi^0)|$. Thus by Lemma 4.8, there exists an odd 4-coloring φ^1 of G_1 such that v anchors a (v, φ^1)-flexible thread, say P. Note then that P is (v, φ^1)-flexible in G_2 as well.

Thus as v anchors a flexible thread in G_2, it follows that v contributes at most one color to $\mathrm{Forb}_{G_2}(u, \varphi^1)$. Thus

$$|\mathrm{Forb}_{G_2}(u, \varphi^1)| \leq |\mathrm{Forb}_{G_2}(u, \varphi^0)| + 1 \leq \sum_{x \in N(u) \setminus \{v\}} s(x) \leq (\mathrm{forb}_G(u) - 2) + 1 \leq i - 1.$$

Since $\mathrm{flex}_{G_2}(u) \geq i$, it follows $|\mathrm{Flex}_{G_2}(u, \varphi^1)| > |\mathrm{Forb}_{G_2}(u, \varphi^1)|$. By Lemma 4.8, there exists an odd 4-coloring φ^2 of G_2. Note that P is a (v, φ^2)-flexible thread G.

Now as v anchors a (v, φ^2)-flexible thread of G, it follows

$$|\mathrm{Forb}_G(w, \varphi^2)| \leq |\mathrm{Forb}_G(w, \varphi^0)| + 1 \leq \sum_{x \in N(w) \setminus \{v\}} s(x) \leq (\mathrm{forb}_G(w) - 2) + 1 \leq k - 1.$$

Since $\mathrm{flex}_G(w) \geq k$, it follows $|\mathrm{Flex}_G(w, \varphi^2)| > |\mathrm{Forb}_G(w, \varphi^2)|$. Thus by Lemma 4.8, there exists an odd 4-coloring φ^3 of G, thereby contradicting that G is a minimum counter example.

The other two cases uses a similar argument, except we change the order in which we color. Namely, if $\mathrm{forb}_G(u) = i+1$, $\mathrm{forb}_G(v) \leq j+1$, $\mathrm{forb}_G(w) = k+1$, then we take $G_1 := G - (S[w] \cup S[v])$, $G_2 := G - S[v]$. If $\mathrm{forb}_G(u) = i+1$, $\mathrm{forb}_G(v) \leq j+2$, $\mathrm{forb}_G(w) = k$, we take $G_1 := G - (S[v] \cup S[w])$ and $G_2 := G - S[w]$. □

Lemma 4.15. *Let $u_1 v u_2$ be a 3-path, where u_1 and u_2 are 4-vertices, and v is a semi-bad 3-vertex in G. If both u_1 and u_2 have a t_3-neighbor, then $\mathrm{forb}(u_1) \geq 3$ and $\mathrm{forb}(u_2) \geq 4$ (or vice-versa).*

Proof. Since G has girth at least 10, it follows $S[u_1]$, $S[v]$, $S[u_2]$ are pairwise disjoint. By Corollary 4.12, $\mathrm{forb}(u_i) \geq 3$ for each $i \in [2]$. Suppose for contradiction that $\mathrm{forb}(u_1) = \mathrm{forb}(u_2) = 3$.

Let $G_0 := G - (S[u_1] \cup S[v] \cup S[u_2])$, $G_1 := G - (S[v] \cup S[u_2])$, and $G_2 := G - S[v]$. Let φ^0 be an odd 4-coloring of G_0. Since $v \notin G_0$, we have

$$|\mathrm{Forb}_{G_1}(u_1, \varphi^0)| \leq \sum_{x \in N_{G_1}(u_1)} s(x) \leq \sum_{x \in N_G(u_1) \setminus \{v\}} s(x) \leq \mathrm{forb}_G(u_1) - 1 = 2.$$

Thus $\mathrm{flex}_{G_1}(u_1) \geq 3$, and so $|\mathrm{Flex}_{G_1}(u_1, \varphi^0)| > |\mathrm{Forb}_{G_1}(u_1, \varphi^0)|$. By Lemma 4.8, there exists an odd 4-coloring φ^1 of G_1 such that u_1 anchors a (u, φ^1)-flexible thread, say P. Note that P is (u, φ^1)-flexible in G as well.

Now as $v \notin G_2$, it follows

$$|\mathrm{Forb}_{G_2}(u_2, \varphi^1)| \leq \sum_{x \in N_G(u_2) \setminus \{v\}} s(x) \leq \mathrm{forb}_G(u_2) - 1 = 2,$$

and thus since $\mathrm{flex}_{G_2}(u_2) \geq 3$, it follows $|\mathrm{Flex}(u_2, \varphi^1)| > |\mathrm{Forb}(u_2, \varphi^1)|$. By Lemma 4.8, there exists an odd 4-coloring φ^2 of G_2 such that u_2 has a (u_2, φ^2)-flexible thread, say Q. Note that Q is also (u_2, φ^2)-flexible in G.

Let w be the 2-neighbor of v, and w' be the anchor of w not equal to v. Extend φ^2 by coloring v an arbitrary color from $[4] \setminus \{\varphi^2(u_1), \varphi^2(u_2), \varphi^2(w')\}$. Since w isn't colored by φ^2, the resulting coloring is proper. Now color w an arbitrary color from $[4] \setminus \{\varphi^2(w'), \varphi_o(w'), \varphi^2(v)\}$. The resulting coloring (say φ^3) is proper. At this point, all vertices colored by φ^3 have an odd color except possibly u_1 and u_2. However, note that P and Q are (u_1, φ^3) and (u_2, φ^3)-flexible, respectively, in G. Thus, if needed, we may recolor P and Q so that u_1 and u_2 have an odd color. The result is an odd 4-coloring of G, a contradiction. Therefore, it cannot be the case that both $\mathrm{forb}_G(u_1) = 3$ and $\mathrm{forb}_G(u_2) = 3$. It therefore follows either $\mathrm{forb}_G(u_1) \geq 3$ and $\mathrm{forb}_G(u_2) \geq 4$, or vice-versa. □

Lemma 4.16. *Let f be a face of G with array representation $a_4 a_4 a_1 a_1$. Suppose further the boundary of f contains a 3-vertex, say b, with neighbors a, c also on the boundary of f. If $\mathrm{forb}(a) = \mathrm{forb}(c) = 3$, then both a and c each have at most one t_3-neighbor.*

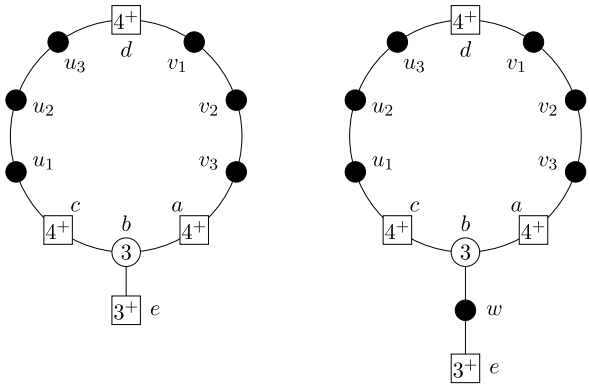

(I) f as in Lemma 4.16 (II) f as in Lemma 4.17

Fig. 3. Different cases of the array representation $a_4a_4a_1a_1$ as considered in Lemmas 4.16 and 4.17. Note that in (II), e is a 3^+-vertex by Observation 3.1(3).

Proof. Let f be a face with array representation $a_4a_4a_1a_1$. Let the vertices on f be c, u_1, u_2, u_3, d, v_1, v_2, v_3, a, b with degree sequence $4^+-2-2-2-4^+-2-2-2-4^+-3$. Let e be the neighbor of b not on the boundary of f. See Fig. 3(I) for an illustration. Now suppose for contradiction that $\text{forb}(a)=\text{forb}(c)=3$ and both a and c are adjacent to at least two t_3-neighbors.

As G has girth at least 10, it follows $S[a]$, $S[c]$ are disjoint. Let $G_0 := G-(S[a]\cup S[c]\cup\{b\})$. Let $G_1 := G-(S[c]\cup\{b\})$. By the minimality of G, G_0 has an odd 4-coloring φ^0.

Since $b\notin G_0$, it follows

$$|\,\text{Forb}_{G_1}(a,\varphi^0)| \le \sum_{x\in N_G(a)\setminus\{b\}} s(x) \le \text{forb}_G(a)-1=2.$$

Thus since $\text{flex}_{G_1}(a)\ge 3$, it follows $|\,\text{Flex}_{G_1}(a,\varphi^0)| > |\,\text{Forb}_{G_1}(a,\varphi^0)|$, therefore, there exists an odd 4-coloring φ^1 of G_1 such that a has a (a,φ^1)-flexible thread by Lemma 4.8; furthermore, as a contains two t_3-neighbors in G (and thus in G_1), we may assume P is the thread anchored by a that is *not* on the boundary of the face f (we may assume this as this thread contributes 3 colors to $\text{Flex}_{G_1}(a,\varphi^0)$). Now let $\alpha := \varphi^1(a)$. We extend φ^1 as follows: set $\varphi^1(b)$ to be any color $\beta\in[4]\setminus\{\alpha,\varphi(e),\varphi_\circ(e)\}$. Now color c any color in $[4]\setminus\text{Forb}_G(c,\varphi^2)$. Since $\text{forb}_G(c)=3$, it follows $|\,\text{Forb}_G(c,\varphi^2)|\le 3$ and thus the coloring remains proper. Next, by following Rule 1 - Rule 4 in Lemma 4.8, we extend the coloring to include $S[c]\setminus\{u_1,u_2,u_3\}$. At this point, $\text{Dom}(\varphi^1)=V(G)\setminus\{u_1,u_2,u_3,v_1,v_2,v_3\}$, and every vertex except possibly c,u_2,v_2,a have an odd color.

If $\varphi^2_\circ(c)$ exists, then color u_1 a color in $[4]\setminus\{\varphi^2(c),\varphi^2_\circ(c)\}$; otherwise, color u_1 a color not equal to $\varphi^2(c)$ and note this is an odd color for c. Now color u_2 a color in $[4]\setminus\{\varphi^2(u_1),\varphi^2(c)\}$, and then color u_3 a color in $[4]\setminus\{\varphi^2(u_2),\varphi^2(u_1),\varphi^2(d)\}$. Now color v_1 a color in $[4]\setminus\{\varphi^2(d),\varphi^2_\circ(d)\}$, and color v_2 in $[4]\setminus\{\varphi^2(v_1),\varphi^2(d)\}$, then color v_3 a color in $[4]\setminus\{\varphi^2(v_1),\varphi^2(v_2),\varphi^2(a)\}$. At this point, all of G is colored and every vertex except possibly a has an odd color. However, P remains (a,φ^2)-flexible. Thus we may recolor P if needed so that a has an odd-color (note that the anchor of P not equal to a is not an isolated vertex in G_0. Thus it has an odd color that is not coming from a vertex on P or any thread of c. Therefore, even if this anchor was an anchor of a thread of c, it remains (a,φ^2)-flexible). This shows G is odd 4-colorable, a contradiction. Thus a has at most one t_3-neighbor. □

Lemma 4.17. *Let f be a face of G with array representation $a_4a_4a_1a_1$. Further suppose f contains a semi-bad 3-vertex, say b, with neighbors a and c also on the boundary of f. If $\text{forb}(a)+\text{forb}(c)\le 7$ and $\text{forb}(a)\le\text{forb}(c)$, then a is adjacent to at most one t_3-neighbor.*

Proof. Let f be a face with array representation $a_4a_4a_1a_1$. Let the vertices on f be c, u_1, u_2, u_3, d, v_1, v_2, v_3, a, b with degree sequence $4^+-2-2-2-4^+-2-2-2-4^+-3$. Let w be the 2-neighbor of b not on f, and let e be the neighbor of w that is not b. See Fig. 3(II) for an illustration. Now suppose for contradiction, $\text{forb}(a)+\text{forb}(c)\le 7$ and a is adjacent to at least two t_3-neighbors. By Lemma 4.15 and the assumptions that $\text{forb}(a)+\text{forb}(c)\le 7$ and $\text{forb}(a)\le\text{forb}(c)$, we obtain $\text{forb}(a)=3$ and $\text{forb}(c)=4$.

Since G has girth 10, $S[a]$ and $S[c]$ are disjoint. Let $G_0 := G-(S[a]\cup S[c]\cup\{b,w\})$. By the minimality of G, G_0 has an odd 4-coloring φ^0. Let $G_1 := G_0\cup S[a]$.

Since $b\notin G_1$ it follows

$$|\,\text{Forb}_{G_1}(a,\varphi^0)| \le \sum_{x\in N_G(a)\setminus\{b\}} s(x) \le \text{forb}_G(a)-1=2.$$

Thus since $\mathrm{flex}_{G_1}(a) \geq 3$, it follows $|\mathrm{Flex}_{G_1}(a, \varphi^0)| > |\mathrm{Forb}_{G_1}(a, \varphi^0)|$. Thus by Lemma 4.8, there exists an odd 4-coloring φ^1 of G_1 such that a anchors a (a, φ^1)-flexible thread, say P; furthermore, as a contains two t_3 neighbor in G (and thus in G_1), we may assume P is the thread anchored by a that is not on the boundary of the face f (we may assume this as this thread contributes 3 colors to $\mathrm{Flex}_{G_1}(a, \varphi^0)$.) We then extend φ^1 as follows: since b is uncolored by φ^1, it follows b contributes at most 1 to $\mathrm{Forb}_G(c, \varphi^1)$. Thus

$$|\mathrm{Forb}_G(c, \varphi^1)| \leq \sum_{x \in N_G(c) \setminus \{b\}} s(x) + 1 = \sum_{x \in N_G(c)} s(x) - 2 + 1 = \mathrm{forb}_G(c) - 1 = 3.$$

Thus we may properly color c a color in $[4] \setminus \mathrm{Forb}_G(c, \varphi^1)$. Now by following the coloring rules in Lemma 4.8, we extend φ^1 to φ^2 to include all of $S[c] \setminus \{u_1, u_2, u_3\}$.

Next, set $\varphi^2(b) \in [4] \setminus \{\varphi^2(c), \varphi^2(a), \varphi^2(e)\}$, then set $\varphi^2(w) \in [4] \setminus \{\varphi^1(b), \varphi^1(e), \varphi^1_{\mathrm{o}}(e)\}$. At this point the coloring includes $V(G) \setminus \{u_1, u_2, u_3, v_1, v_2, v_3\}$ and every vertex except possibly $\{c, u_2, v_2, a\}$ have an odd color.

The proof then follows exactly as in the last paragraph of Lemma 4.16. □

5. Proof of Theorem 1.1

We note that we use terminology defined in §2 and §4. In this section, we prove the following:

Theorem *(1.1). If G is a planar graph with girth at least 10, then $\chi_{\mathrm{o}}(G) \leq 4$.*

Proof. Suppose for contradiction, the theorem is false. Among all counterexamples, choose a plane graph G such that $|V(G)|$ is minimized. Then G is connected and, as mentioned in the introduction, the results of [6] imply the girth of G is exactly 10.

We let $\mu : V(G) \cup F(G) \to \mathbb{R}$ defined by

$$\mu(x) = \begin{cases} 2\deg(x) - 6, & x \in V(G), \\ \ell(x) - 6, & x \in F(G) \end{cases}$$

be the initial assignment of charge to the vertices and faces of G. By Euler's formula,

$$\sum_{x \in V(G) \cup F(G)} \mu(x) = -12.$$

We redistribute the charges as follows:

Discharging Rules

(V1) Each 4^+-vertex sends charge $\frac{5}{6}$ to its t_3-neighbors.
(V2) Each 4^+-vertex sends charge $\frac{2}{3}$ to its t_2-neighbors.
(V3) Each 4^+-vertex sends charge $\frac{1}{3}$ to its t_1-neighbors.
(V4) Each 4^+-vertex sends charge $\frac{1}{5}$ each to the 2-neighbors of its t_{worst}- and t_{bad}-neighbors.
(V5) Each 4^+-vertex sends charge $\frac{1}{10}$ to the 2-neighbors of its $t_{\text{s-bad}}$-neighbors.

(F1) Each face sends charge $\frac{2}{3}$ to incident good 2-vertices (recall Definition 2.2).
(F2) Each face sends charge $\frac{11}{15}$ to incident bad 2-vertices.
(F3) Each face sends charge $\frac{4}{5}$ to incident worst 2-vertices.
(F4) Each face sends charge $\frac{2}{3}$ to incident vertices in a 2-thread.
(F5) Each face sends charge $\frac{7}{12}$ to the endpoints of a 3-thread and charge 1 to the middle vertex.

(R1) After all previous rules are applied, a 4^+-vertex v divides its remaining charge evenly among its incident poor faces.

More precisely, let $\mu' : V(G) \cup F(G) \to \mathbb{R}$ be the charge obtained by applying (V1) through (V5) and (F1) through (F5). We let $p(v)$ be the number of poor faces that v is incident to (we count a face only once, even if v appears multiple times on a boundary walk of f.) Then, if f is poor and incident to v, by (R1), we send charge $\frac{\mu'(v)}{p(v)}$ from v to f. Let $\mu'' : V(G) \cup F(G) \to \mathbb{R}$ be the final charge after applying (R1).

Fig. 4 and 5 illustrate the vertex and face discharging rules.

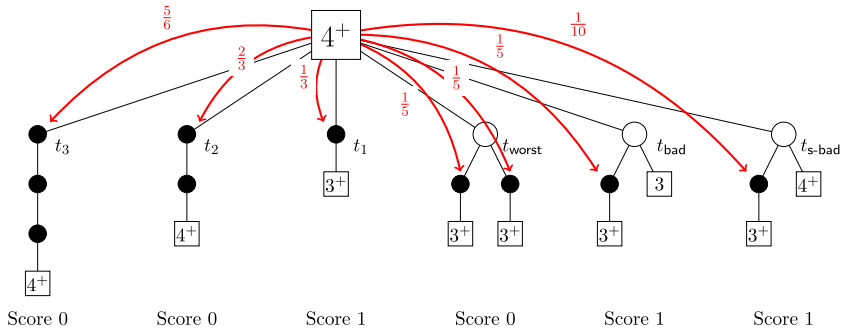

Fig. 4. Vertex discharging rules (V1) - (V5) and the associated scores of a neighbor.

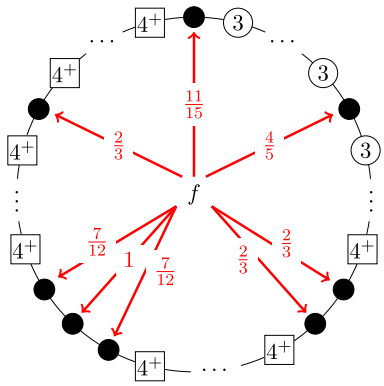

Fig. 5. Face discharging rules (F1) - (F5).

In §5.1, we show $\mu''(v) \geq 0$ for each $v \in V(G)$. In §5.2, we show $\mu''(f) \geq 0$ for each rich face f of G. Lastly, in §5.3, we show $\mu''(f) \geq 0$ for each poor face f in G. Then as

$$0 \leq \sum_{x \in V(G) \cup F(G)} \mu''(x) = \sum_{x \in V(G) \cup F(G)} \mu(x) = -12,$$

we obtain a contradiction, completing the proof of Theorem 1.1. □

5.1. Every vertex has nonnegative final charge

Lemma 5.1. *Each vertex has nonnegative final charge. That is $\mu''(v) \geq 0$ for all $v \in V(G)$.*

Proof. We argue each vertex has nonnegative final charge via a series of claims. Let $v \in V(G)$.

Claim 5.1.1. *If $\deg(v) \geq 6$, then $\mu''(v) \geq 0$.*

Proof. Since v sends at most $\frac{5}{6}$ charge to any neighbor by rule (V1), it follows the remaining charge on v before (R1) is applied is given by $\mu'(v) = (2\deg(v) - 6) - (\frac{5}{6}\deg(v)) = \frac{7}{6}\deg(v) - 6 \geq 1 \geq 0$. Thus $\mu''(v) \geq 0$. □

Claim 5.1.2. *If $\deg(v) = 5$, then $\mu''(v) \geq 0$.*

Proof. Let $N(v) = \{x_1, x_2, x_3, x_4, x_5\}$. By relabeling, we may assume $s(x_i) \leq s(x_j)$ for $i < j$. If v contains a t_3-neighbor, then without loss of generality let it be x_1. By Corollary 4.12, $\text{forb}(v) \geq 3$. Thus $s(x_5) \geq 1$. Therefore v sends $\frac{5}{6}$ charge to x_1, at most $\frac{5}{6}$ charge to x_2, x_3, x_4 each by rule (V1), and at most $\frac{1}{3}$ charge to x_5 by rule (V3). Thus v sends at most $\frac{22}{6}$ charge to its neighbors, and thus $\mu'(v) \geq (2\deg(v) - 6) - (\frac{22}{6}) \geq 0$. Thus $\mu''(v) \geq 0$.

Now assume v has no t_3-neighbors. Then v sends at most $\frac{2}{3}$ charge to each of its neighbors by rule (V2), and thus $\mu'(v) \geq (2\deg(v) - 6) - (\frac{2}{3}\deg(v)) \geq 0$. Therefore $\mu''(v) \geq 0$. □

Claim 5.1.3. *If $\deg(v) = 4$, then $\mu''(v) \geq 0$.*

Proof. Let $N(v) = \{x_1, x_2, x_3, x_4\}$. By relabeling, we may assume $s(x_i) \le s(x_j)$ for $i < j$. Suppose v has a t_3-neighbor; without loss of generality, assume it is x_1. Then v sends $\frac{5}{6}$ charge to x_1 by rule (V1). By Corollary 4.12, $\text{forb}(v) \ge 3$. It follows that if $s(x_2) = 0$, then $s(x_3) \ge 1$ and $s(x_4) \ge 2$, thus v sends at most $\frac{5}{6}$ charge to x_2 by rule (V1), at most $\frac{1}{3}$ charge to x_3 by rule (V3), and at most 0 charge to x_4, and thus sends at most 2 total charge to its neighbors. Thus $\mu'(v) \ge (2(4) - 6) - (2) \ge 0$. On the other hand, if $s(x_2) \ge 1$, then v sends at most $\frac{1}{3}$ charge to each of x_2, x_3, x_4 by rule (V3), and thus sends at most $\frac{11}{6}$ charge total. Thus $\mu'(v) \ge (2(4) - 6) - (\frac{11}{6}) \ge 0$. Thus, in both cases, $\mu'(v) \ge 0$ and so $\mu''(v) \ge 0$.

Now suppose v has no t_3-neighbor but has a t_2-neighbor; without loss of generality, assume it is x_1. Then v sends $\frac{2}{3}$ charge to x_1 by rule (V2). By Corollary 4.12, $\text{forb}(v) \ge 2$. Thus at most two of $s(x_2), s(x_3), s(x_4)$ can be 0. If $s(x_2) = 0$ and $s(x_3) = 0$, then $s(x_4) = 2$. Thus v sends at most $\frac{2}{3}$ charge to x_2 and x_3 by rule (V2), and at most 0 charge to x_4. Thus v sends at most 2 charge and so, $\mu'(v) \ge (2(4) - 6) - (2) \ge 0$. If $s(x_2) = 0$, and $s(x_3) \ge 1$, then v sends at most $\frac{2}{3}$ charge to x_2 by rule (V2), and at most $\frac{1}{3}$ charge to x_3 and x_4 each by rule (V3). Thus v sends at most 2 charge and so, $\mu'(v) \ge (2(4) - 6) - (2) \ge 0$. If $s(x_2) \ge 1$, then v sends at most $\frac{1}{3}$ charge to each of x_2, x_3, x_4 by rule (V3), and thus sends at most $\frac{5}{3}$ charge. Thus $\mu'(v) \ge (2(4) - 6) - (\frac{5}{3}) \ge 0$. Therefore, $\mu'(v) \ge 0$ and so $\mu''(v) \ge 0$.

Now suppose v has no t_3- nor t_2-neighbor. Then v sends charge at most $\frac{2}{5}$ to each of its neighbors by rule (V4), and thus sends at most $\frac{8}{5}$ charge. Therefore, $\mu'(v) \ge (2(4) - 6) - (\frac{8}{5}) \ge 0$ and so $\mu''(v) \ge 0$. Thus in all cases, $\mu''(v) \ge 0$. □

Claim 5.1.4. *If* $\deg(v) \le 3$, *then* $\mu''(v) \ge 0$.

Proof. By Observation 3.1(1), there are no vertices of degree 1, and if $\deg(v) = 3$, then v does not participate in any discharging rule. Therefore, $\mu'(v) \ge 0$ and so $\mu''(v) \ge 0$. Thus, we may assume $\deg(v) = 2$. By Observation 3.1(2), v is on a k-thread for $k = 1, 2, 3$.

First suppose v is on a 1-thread. If v is a good vertex, then by rule (V3), both of v's neighbors send $\frac{1}{3}$ charge to v. By Observation 3.3, v is incident to at least 2 faces, and by rule (F1) each face incident to v sends $\frac{2}{3}$ charge to v. Thus $\mu'(v) = (2(2) - 6) + (\frac{1}{3}(2) + \frac{2}{3}(2)) = 0$. If v is a bad vertex, let y be its 3-neighbor and w be its 4^+-neighbor. By Observation 3.6, y is incident to a 4^+-vertex x (note $x \ne w$ as G has girth 10). If y is a semi-bad 3-vertex, then y have two 4^+-neighbors x and z, which each of them sends $\frac{1}{10}$ charge to v by rule (V5). If y is a bad 3-vertex, then by rule (V4), x sends $\frac{1}{5}$ charge to v. By rule (V3), w sends $\frac{1}{3}$ charge to v. By rule (F2), the two faces incident to v each send $\frac{11}{15}$ charge to v. Therefore, $\mu'(v) = (2(2) - 6) + (\frac{1}{5} + \frac{1}{3} + \frac{11}{15}(2)) = 0$ and so $\mu''(v) \ge 0$.

If v is a worst vertex, let y_1 and y_2 be its neighbors. By Observation 3.6, y_1 is incident to a 4^+-vertex x_1 and y_2 is incident to a 4^+-vertex x_2. Since $g(G) = 10$, all the vertices y_1, y_2, x_1, x_2 are distinct. By rule (V4), x_1 and x_2 each send $\frac{1}{5}$ charge to v. By rule (F3), the two faces incident to v each send $\frac{4}{5}$ charge to v. Therefore, $\mu'(v) = (2(2) - 6) + (\frac{1}{5}(2) + \frac{4}{5}(2)) = 0$ and so $\mu''(v) \ge 0$.

Next suppose v is on a 2-thread. By Observation 3.1(3), v has a 4^+-neighbor, x. By rule (V2), x sends $\frac{2}{3}$ charge to v. By rule (F4), the two faces incident to v each send $\frac{2}{3}$ charge to v. Therefore, $\mu'(v) = (2(2) - 6) + (\frac{2}{3} + \frac{2}{3}(2)) = 0$ and so $\mu''(v) \ge 0$.

Finally suppose v is on a 3-thread, say $v_1 v_2 v_3$ with anchors u and w. By Observation 3.1(3), each of u and w are 4^+-vertices. If $v = v_2$, then by rule (F5), the two faces incident to v each send 1 charge to v. Therefore, $\mu'(v) = (2(2) - 6) + (1(2)) = 0$ and so $\mu''(v) \ge 0$. If $v = v_1$ or $v = v_3$, then by rule (V1), the anchor adjacent to v sends $\frac{5}{6}$ charge to v. By (F5), the two faces incident to v each send $\frac{7}{12}$ charge to v. Therefore, $\mu'(v) = (2(2) - 6) + (\frac{5}{6} + \frac{7}{12}(2)) = 0$ and so $\mu''(v) \ge 0$. □

Thus, in all cases, $\mu''(v) \ge 0$. This completes the proof of Lemma 5.1. □

5.2. Every rich face has nonnegative final charge

Recall by Corollary 3.2, every boundary of a face of G can be represented by arrays. For each array in Definition 2.4, we compute the average charge a face discharges to the vertices represented by the array based on rules (F1) - (F5). For example, the array a_4 represents the subsequence $4^+ - 2 - 2 - 2$ of the sequence $4^+ - 2 - 2 - 2 - 4^+$. By discharging rules (V1) - (F5), a face whose boundary degree sequence contains a_4 will distribute charge 0 to the 4^+-vertex, 1 to the middle 2-vertex, and $\frac{7}{12}$ to the other two 2-vertices. Thus the average charge received by the vertices represented by a_4 from a face is $\frac{13}{24}$. Fig. 6 summarizes the average charge received per vertex for each array.

Recall that for each $f \in F(G)$, $\mu'(f)$ is the charge of f after applying (F1) through (F5), and $\mu''(f)$ is a charge of f after applying (R1). Note that $\mu''(f) \ge \mu'(f)$.

Lemma 5.2. *Each rich face has nonnegative final charge. That is* $\mu''(f) \ge 0$ *for all rich faces* $f \in F(G)$.

Proof. Since $\mu''(f) \ge \mu'(f)$, it suffices to show $\mu'(f) \ge 0$. We argue each rich face has nonnegative final charge via a series of claims. Since G has girth 10, $\ell(f) \ge 10$. We note that the assumption f is rich is only used for faces of length 10. Recall that the initial charge of a face is $\mu(f) = \ell(f) - 6$. Also recall by Corollary 3.2, every vertex of f is contained in some array.

Array	Degree Sequence	Average Charge Received per Vertex
a_4	$\boxed{4^+ - 2 - 2 - 2} - 4^+$	$\frac{13}{24}$
a_3	$\boxed{4^+ - 2 - 2} - 4^+$	$\frac{4}{9}$
a_2^{worst}	$\boxed{3 - 2} - 3$	$\frac{2}{5}$
a_2^{bad}	$\boxed{3 - 2} - 4^+$ or $\boxed{4^+ - 2} - 3$	$\frac{11}{30}$
a_2^{good}	$\boxed{4^+ - 2} - 4^+$	$\frac{1}{3}$
a_1	$\boxed{3^+} - 3^+$	0

Fig. 6. Arrays in decreasing order of average charge received to its represented vertices by a face.

Claim 5.2.1. *If $\ell(f) \geq 14$, $\mu'(f) \geq 0$.*

Proof. Since the average charge received by a vertex represented by an array is at most $\frac{13}{24}$, we have $\mu'(f) \geq (\ell(f) - 6) - (\frac{13}{24}\ell(f)) = \frac{11}{24}\ell(f) - 6 \geq \frac{11}{24}(14) - 6 \geq 0$. □

Claim 5.2.2. *If $\ell(f) = 13$, $\mu'(f) \geq 0$.*

Proof. Suppose f is a 13-face. Fix an array representation of f, and let x denote the number of a_4 arrays in this representation. Clearly $0 \leq x \leq 3$ and hence at most 12 of the 13 vertices incident to f receive an average charge of $\frac{13}{24}$. The other vertices receive an average charge of at most $\frac{4}{9}$. Thus, $\mu'(f) \geq \mu'(f) \geq (\ell(f) - 6) - (\frac{13}{24}(12) + \frac{4}{9}(1)) \geq 0$. □

Claim 5.2.3. *If $\ell(f) = 12$, $\mu'(f) \geq 0$.*

Proof. Suppose f is a 12-face. Fix an array representation of f and let x and y denote the number of a_4 and a_3 arrays in the array representation, respectively. Clearly $0 \leq x \leq 3$ and $x \neq 3$ by Corollary 3.10. If $x \leq 1$ then $\mu'(f) \geq (12-6) - (\frac{13}{24}(4) + \frac{4}{9}(8)) \geq 0$, as desired. Thus, assume $x = 2$. Then $0 \leq y \leq 1$. If $y = 0$ then $\mu'(f) \geq (12-6) - (\frac{13}{24}(8) + \frac{2}{5}(4)) \geq 0$ and if $y = 1$ then f has an array representation which is some permutation of a_4, a_4, a_3, a_1, and thus $\mu'(f) = (12-6) - (\frac{13}{24}(8) + \frac{4}{9}(3)) \geq 0$. □

Claim 5.2.4. *If $\ell(f) = 11$, $\mu'(f) \geq 0$.*

Proof. Suppose f is an 11-face. Fix an array representation of f, and let x and y denote the number of a_4 and a_3 arrays in this representation, respectively. Clearly $0 \leq x \leq 2$ and $0 \leq y \leq 3$.

First suppose $x = 0$. Then the average charge received per vertex by a face is at most $\frac{4}{9}$. Thus $\mu'(f) \geq (11-6) - (\frac{4}{9}(11)) \geq 0$.

Next suppose $x = 1$. Then it follows $0 \leq y \leq 2$. If $y = 0$ then $\mu'(f) \geq (11-6) - (\frac{13}{24}(4) + \frac{2}{5}(7)) \geq 0$. If $y = 2$, then the array representation of f is some permutation of a_4, a_3, a_3, a_1 and thus, $\mu'(f) = (11-6) - (\frac{13}{24}(4) + \frac{4}{9}(6)) \geq 0$. Thus we may assume $y = 1$. If the array representation contains a_2^{worst}, then this is the only a_2 it contains, and thus $\mu'(f) \geq (11-6) - (\frac{13}{24}(4) + \frac{4}{9}(3) + \frac{2}{5}(2)) \geq 0$. If the array representation does not contain a_2^{worst}, then it contains at most two copies of the other a_2 arrays, and thus: $\mu'(f) \geq (11-6) - (\frac{13}{24}(4) + \frac{4}{9}(3) + \frac{11}{30}(4)) \geq 0$.

Finally, suppose $x = 2$. Clearly $0 \leq y \leq 1$. If $y = 1$, then the array representation of f is some permutation of a_4, a_4, a_3, which cannot occur by Corollary 3.10. Thus, we may assume $y = 0$. Then clearly the array representation contains at most one a_2. As an a_2^{worst} cannot be adjacent to an a_4, it follows the array representation does not contain a_2^{worst}. If the array representation does not contain a_2^{bad}, then: $\mu'(f) \geq (11-6) - (\frac{13}{24}(8) + \frac{1}{3}(2)) = 0$. So assume the array representation contains a_2^{bad}. Then the boundary of f can be represented by $a_4 a_1 a_2^{\text{bad}} a_4$ (recall we may start at an arbitrary vertex and follow an arbitrary orientation). However, having $a_2^{\text{bad}} a_4$ as a subsequence violates Corollary 3.8, so this cannot occur. This completes the claim. □

Claim 5.2.5. *If $\ell(f) = 10$, and f is rich, then $\mu'(f) \geq 0$.*

Proof. Suppose f is a 10-face which is rich (recall Definition 2.5). Fix an array representation of f. Let x and y denote the number of a_4 and a_3 arrays in this representation, respectively. Clearly $0 \leq x \leq 2$ and $0 \leq y \leq 3$.

First suppose $x = 0$. If $y = 0$, then $\mu'(f) \geq (10-6) - (\frac{2}{5}(10)) = 0$. If $y = 1$, then the array representation of f contains a subsequence of the form abc, where $b = a_3$. Note that by degree restrictions, $a, c \neq a_2^{\text{worst}}$, and by Corollary 3.8, $a, c \neq a_2^{\text{bad}}$. If $a = c = a_2^{\text{good}}$, then the representation can contain at most one more a_2. It follows $\mu'(f) \geq (10-6) - (\frac{4}{9}(3) + \frac{1}{3}(4) + \frac{2}{5}(2)) \geq 0$. Otherwise, at most one of a or c is equal to a_2^{good}. Thus at most two more a_2 can occur, and it follows $\mu'(f) \geq (10-6) - (\frac{4}{9}(3) + \frac{1}{3}(2) + \frac{2}{5}(4)) \geq 0$. Therefore we may assume $y \neq 1$ when $x = 0$. If $y = 2$, then let a and b be two copies of a_3 in

the array representation of f. Note that by degree restrictions, the array representation does not contain a_2^{worst} adjacent to a or b, and by Corollary 3.8, the array representation does not contain a_2^{bad} adjacent to a or b. If a and b are not adjacent, then the array representation does not contain any copies of a_2^{worst} or a_2^{bad}; furthermore, it can contain at most two copies of a_2^{good}, and thus $\mu'(f) \geq (10-6) - (\frac{4}{9}(6) + \frac{1}{3}(4)) \geq 0$. If a and b are adjacent, then the representation contains at most one copy of a_2^{worst}, and by Corollary 3.8, at most one copy of a_2^{bad}. In either case, it contains at most one a_2, and thus $\mu'(f) \geq (10-6) - (\frac{4}{9}(6) + \frac{2}{5}) \geq 0$. If the array representation contains no copies of a_2^{worst} or a_2^{bad} then it can contain at most two copies of a_2^{good}, and thus $\mu'(f) \geq 0$, as argued a few sentences previously. If $y = 3$, then the array representation of f contains three a_3 and one a_1 by degree restrictions, and thus $\mu'(f) \geq (10-6) - (\frac{4}{9}(9)) = 0$. Thus we may assume it is not the case that $x = 0$.

Therefore we may assume $x = 1$. Clearly $0 \leq y \leq 2$. If $y = 2$, then the array representation of f is some permutation of a_4, a_3, a_3, which cannot occur by Lemma 3.9. If $y = 1$, then it follows the representation containing at most one a_2. By degree restrictions, this a_2 is not a_2^{worst}, and it is not a_2^{bad} by Corollary 3.8. Thus, the representation of f is either some permutation of $a_4, a_3, a_2^{\text{good}}, a_1$, contradicting that f is rich; or f is some permutation of a_4, a_3, a_1, a_1, a_1, in which case $\mu'(f) \geq (10-6) - (\frac{13}{24}(4) + \frac{4}{9}(3)) \geq 0$. Thus we may assume $y \neq 1$. So assume $y = 0$. Since $x = 1$, the array representation contains a subsequence of the form abc, where $b = a_4$. Note that by degree requirements, $a, c \neq a_2^{\text{worst}}$, and by Corollary 3.8, $a, c \neq a_2^{\text{bad}}$. If $a = c = a_2^{\text{good}}$, then the representation can contain at most one more a_2. However, by degree requirements this a_2 cannot be a_2^{worst} or a_2^{bad}. If this a_2 were a_2^{good}, then the array representation would be $a_4 a_2^{\text{good}} a_2^{\text{good}} a_2^{\text{good}}$, contradicting Corollary 3.12. Thus the representation contains no additional a_2, and so $\mu'(f) \geq (10-6) - (\frac{13}{24}(4) + \frac{1}{3}(4)) \geq 0$. If at most one of a or c is equal to a_2^{good}, then the other is equal to a_1. In addition, at most one more a_2 can occur, and so it follows $\mu'(f) \geq (10-6) - (\frac{13}{24}(4) + \frac{1}{3}(2) + \frac{2}{5}(2)) \geq 0$. Thus we may assume we do not have $x = 1$ and $y = 0$.

So suppose $x = 2$. Then $y = 0$. Let a and b be the two copies of a_4. If a and b are not adjacent in the representation, then it follows f can be represented by $a_4 a_1 a_4 a_1$. However, this is a permutation of a_4, a_4, a_1, a_1, and thus this contradicts that f is a rich face. Thus we may assume a and b are adjacent in the representation. Note that the representation is not equal to $a_4 a_4 a_1 a_1$, as this is a permutation of a_4, a_4, a_1, a_1, yet f is a rich face. So we may assume f is represented by $a_4 a_4 a_2$. It follows from degree requirements that a_2 is a_2^{good}. However, this cannot occur by Corollary 3.12. Thus $x \neq 2$. This concludes the claim. □

Therefore, every rich face f has nonnegative final charge. This completes the proof of Lemma 5.2. □

5.3. Every poor face has nonnegative final charge

Let v be incident to at least one poor face. Recall by (R1), v sends charge $\frac{\mu'(v)}{p(v)}$ to each poor face f incident to v. For convenience, let $\eta(v) = \frac{\mu'(v)}{p(v)}$.

Lemma 5.3. *Let v be a 4-vertex incident to at least one poor face.*

(1) If $\text{forb}(v) \geq 4$, *then* $\eta(v) \geq \frac{1}{12}$.

(2) If $\text{forb}(v) \geq 5$, *then* $\eta(v) \geq \frac{1}{6}$.

(3) If $\text{forb}(v) \geq 6$, *then* $\eta(v) \geq \frac{1}{4}$.

Proof. Suppose v is a 4-vertex. Then $p(v) \leq 4$. Let x_i denote the number of neighbors of v with score i, where $i \in \{0, 1, 2\}$. Note that $\text{forb}(v) = x_1 + 2x_2$. Note that by the discharging rules (V1) and (V3), $\mu'(v) \geq (2(4)-6) - (\frac{5}{6}(x_0) + \frac{1}{3}(x_1) + 0(x_2))$.

If $\text{forb}(v) \geq 4$, then as $\deg(v) = 4$, it follows $x_0 \leq 2$. If $x_0 = 2$, then $(x_0, x_1, x_2) = (2, 0, 2)$ and thus $\mu'(v) \geq (2(4) - 6) - (\frac{5}{6}(2)) \geq \frac{1}{3}$. Thus $\eta(v) \geq \frac{1}{12}$. If $x_0 = 1$, then $(x_0, x_1, x_2) = (1, 2, 1)$ or $(x_0, x_1, x_2) = (1, 0, 3)$. In the first case, $\mu'(v) \geq (2(4)-6) - (\frac{5}{6}(1) + \frac{1}{3}(2)) \geq \frac{1}{2}$, and in the latter case, $\mu'(v) \geq (2(4)-6) - (\frac{5}{6}(1)) \geq \frac{1}{2}$ as well. Thus $\eta(v) \geq \frac{1}{12}$. If $x_0 = 0$, then as $x_1 \leq 4$, it follows: $\mu'(v) \geq (2(4)-6) - (\frac{1}{3}(4)) \geq \frac{2}{3}$. Thus $\eta(v) \geq \frac{1}{12}$ in this case as well.

If $\text{forb}(v) \geq 5$, then $x_0 \leq 1$. If $x_0 = 1$, then $x_2 \geq 2$, and thus $x_1 \leq 1$. So $\mu'(v) \geq (2(4)-6) - (\frac{5}{6}(1) + \frac{1}{3}(1)) = \frac{5}{6}$. Thus $\eta(v) \geq \frac{1}{6}$. If $x_0 = 0$, then as $x_1 \leq 3$, it follows $\mu'(v) \geq (2(4)-6) - (\frac{1}{3}(3)) = 1$, and $\eta(v) \geq \frac{1}{6}$.

If $\text{forb}(v) \geq 6$, then $x_0 \leq 1$. If $x_0 = 1$, then $x_1 = 0$, and so $\mu'(v) \geq (2(4)-6) - (\frac{5}{6}(1)) \geq 1$. So $\eta(v) \geq \frac{1}{4}$. If $x_0 = 0$, then $x_1 \leq 2$, and thus $\mu'(v) \geq (2(4)-6) - (\frac{1}{3}(2)) \geq 1$, so $\eta(v) \geq \frac{1}{4}$. □

Lemma 5.4. *Let v be a 4-vertex such that v is incident to at least one poor face and v has no t_3-neighbors.*

(1) If $\text{forb}(v) \geq 3$, *then* $\eta(v) \geq \frac{1}{12}$.

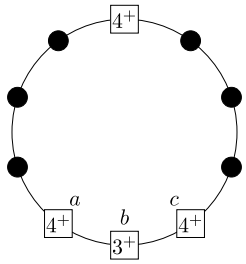

Fig. 7. The face f considered in Claim 5.5.2.

(2) If $\mathrm{forb}(v) \geq 4$, *then* $\eta(v) \geq \frac{1}{6}$.

(3) If $\mathrm{forb}(v) \geq 5$, *then* $\eta(v) \geq \frac{1}{4}$.

(4) If $\mathrm{forb}(v) \geq 6$, *then* $\eta(v) \geq \frac{1}{3}$.

Proof. The proofs follow similarly to the calculations in Lemma 5.3, except now we use the bound by the discharging rules (V2) and (V3), $\mu'(v) \geq (2(4)-6) - (\frac{2}{3}(x_0) + \frac{1}{3}(x_1))$ (i.e., $\frac{2}{3}$ has replaced $\frac{5}{6}$). □

Lemma 5.5. *Each poor face has nonnegative final charge. That is* $\mu''(f) \geq 0$ *for all poor faces* $f \in F(G)$.

Proof. We argue each poor face has nonnegative final charge via a series of claims, namely, looking at the different possibilities of poor faces. By Definition 2.5, the array representation of a poor face is a permutation of a_4, a_4, a_1, a_1 or $a_4, a_3, a_2^{\text{good}}, a_1$. Thus the boundary of a poor face can be represented by one of the following:

- $a_4a_4a_1a_1$
- $a_4a_1a_4a_1$
- $a_4a_3a_2^{\text{good}}a_1$
- $a_4a_3a_1a_2^{\text{good}}$
- $a_4a_2^{\text{good}}a_3a_1$.

Note then that the boundary of a poor face contains no 3-vertex with a 2-neighbor.

Claim 5.5.1. *If* f *has array representation* $a_4a_1a_4a_1$, *then* $\mu''(f) \geq 0$.

Proof. Let f be a face with array representation $a_4a_1a_4a_1$. By rule (F5), $\mu'(f) = (10-6) - (\frac{7}{12}(4) + 1(2)) = -\frac{1}{3}$. Let a, b be two adjacent 4^+-vertices in the boundary of f. Note that by Observation 3.1(3), both a and b are even degree vertices.

Suppose at least one of a or b is a 6^+-vertex; without loss of generality, assume it is a. Since a has at least one 4^+-neighbor (namely b), and since by rule (V1) a vertex sends at most $\frac{5}{6}$ charge to one of its neighbors, it follows $\mu'(a) \geq (2k-6) - (\frac{5}{6}(k-1)) = \frac{7}{6}k - \frac{31}{3}$, and thus $\eta(a) \geq (\frac{7}{6}k - \frac{31}{3})\frac{1}{k} > \frac{1}{4}$. Therefore, the pair a, b together sends at least $\frac{1}{4}$ charge to f by rule (R1), it follows $\mu''(f) \geq \mu'(f) + \frac{1}{4} + \frac{1}{4} \geq (-\frac{1}{3}) + \frac{1}{4} + \frac{1}{4} \geq 0$.

Now suppose both a and b are 4-vertices. Since each of a and b has a t_3-neighbor, by Corollary 4.12 it follows $\mathrm{forb}(a), \mathrm{forb}(b) \geq 3$. Suppose $\mathrm{forb}(a) \geq 5$. Then by Lemma 5.3(2), $\eta(a) \geq \frac{1}{6}$. Similarly, if $\mathrm{forb}(b) \geq 5$ then $\eta(a) \geq \frac{1}{6}$. If $\mathrm{forb}(a), \mathrm{forb}(b) \leq 4$, then by Lemma 4.13, $\mathrm{forb}(a) = \mathrm{forb}(b) = 4$. Thus, by Lemma 5.3(1), $\eta(a) \geq \frac{1}{12}$ and $\eta(b) \geq \frac{1}{12}$. In both cases, $\eta(a) + \eta(b) \geq \frac{1}{6}$. Since the boundary of f contains two pairs of adjacent even 4^+-vertices, and each of the pairs sends at least $\frac{1}{6}$ charge to f by rule (R1), it follows $\mu''(f) \geq \mu'(f) + \frac{1}{6} + \frac{1}{6} \geq (-\frac{1}{3}) + \frac{1}{6} + \frac{1}{6} = 0$. This completes the proof of Claim 5.5.1. □

Claim 5.5.2. *If* f *has array representation* $a_4a_4a_1a_1$, *then* $\mu''(f) \geq 0$.

Proof. Let f have array representation $a_4a_4a_1a_1$. Let abc be the path on the boundary of f where a and c are 4^+-vertices, and b is a 3^+-vertex (see Fig. 7).

By (F5), $\mu'(f) = (10-6) - (\frac{7}{12}(4) + 1(2)) = -\frac{1}{3}$. Note that by rule (V1) a vertex sends at most $\frac{5}{6}$ charge to one of its neighbors. Since b has two 4^+-neighbors, it follows $\mu'(b) \geq (2\deg(b) - 6) - (\frac{5}{6}(\deg(b) - 2))$. We have $\eta(b) \geq \mu'(b)/\deg(b) = \frac{1}{6}(7\deg(b) - 26)/\deg(b) \geq \frac{1}{3}$ when $\deg(b) \geq 6$ and thus $\mu''(f) \geq \mu'(v) + \eta(b) \geq 0$. Therefore, we may assume $\deg(b) \leq 5$. Also, since $\deg(b) \geq 4$, it follows $\eta(b) \geq \frac{1}{3} \cdot \frac{1}{4} = \frac{1}{12}$. Now suppose $x \in \{a, c\}$ is a k-vertex, where $k \geq 6$. Since x is adjacent to at least one 4^+-neighbor, namely b, it follows $\mu'(x) \geq (2k-6) - (\frac{5}{6}(k-1)) = \frac{7}{6}k - \frac{31}{6}$, and thus $\eta(x) \geq (\frac{7}{6}k - \frac{31}{6})\frac{1}{k} \geq$

$\frac{7}{6} - \frac{31}{6k} \geq \frac{11}{36}$. Since $\eta(b) \geq \frac{1}{12}$, it follows that $\mu''(f) \geq \mu'(f) + \eta(x) + \eta(b) \geq (-\frac{1}{3}) + \frac{11}{36} + \frac{1}{12} \geq 0$. Therefore, we may assume $\deg(a), \deg(b), \deg(c) \leq 5$. By Observation 3.1(3), a, c are 4-vertices. We now split into 3 cases based on the value of $\deg(b)$.

Case 1: b is a 5-vertex. Then as b has at least two 4^+-neighbors (namely a and c), it sends charges to at most 3 other vertices. By Observation 3.1(4), there are at most five 2-vertices contained in threads anchored by b. Thus it is easy to see b can send at most $\frac{5}{6} + \frac{2}{3} + \frac{2}{5} = \frac{19}{10}$ charge by rules (V1), (V2), and (V4). Thus $\mu'(b) \geq (2(5) - 6) - (\frac{19}{10}) = \frac{21}{10}$ and so $\eta(b) \geq \frac{21}{10} \cdot \frac{1}{5} > \frac{1}{3}$. Thus, $\mu''(f) \geq \mu'(f) + \eta(b) \geq (-\frac{1}{3}) + \frac{1}{3} = 0$ by rule (R1).

Case 2: b is a 4-vertex. Since b has at least two even 4^+-neighbors a and c, $\text{forb}(b) \geq 4$.

Suppose b has a t_3-neighbor. Then, as $\deg(b) = 4$, it follows $\text{forb}(b) \leq 6$. Suppose $\text{forb}(b) = 6$. Then by Lemma 5.3(3), $\eta(b) \geq \frac{1}{4}$. Since a and c have t_3-neighbors, then by Corollary 4.12 it follows $\text{forb}(a), \text{forb}(c) \geq 3$. It then follows by Lemma 4.14 that either $\text{forb}(a) \geq 4$ or $\text{forb}(c) \geq 4$; without loss of generality, we assume $\text{forb}(a) \geq 4$. By Lemma 5.3(1), $\eta(a) \geq \frac{1}{12}$. Thus, $\mu''(f) \geq \mu'(f) + \eta(a) + \eta(b) \geq (-\frac{1}{3}) + \frac{1}{12} + \frac{1}{4} = 0$ by rule (R1). Suppose $\text{forb}(b) = 5$. Then by Lemma 5.3(2), $\eta(b) \geq \frac{1}{6}$. If $\text{forb}(a) \geq 5$, then by Lemma 5.3(2), $\eta(a) \geq \frac{1}{6}$. Thus, $\mu''(f) \geq \mu'(f) + \eta(a) + \eta(b) \geq (-\frac{1}{3}) + \frac{1}{6} + \frac{1}{6} = 0$ by rule (R1). By symmetry, we may assume $\text{forb}(a), \text{forb}(c) \leq 4$. By Lemma 4.14, $\text{forb}(a) = \text{forb}(c) = 4$. By Lemma 5.3(1), $\eta(a) \geq \frac{1}{12}$ and $\eta(c) \geq \frac{1}{12}$. Thus, $\mu''(f) \geq \mu'(f) + \eta(a) + \eta(b) + \eta(c) \geq (-\frac{1}{3}) + \frac{1}{12} + \frac{1}{6} + \frac{1}{12} = 0$ by rule (R1). Suppose $\text{forb}(b) = 4$. Then by Lemma 5.3(1), $\eta(b) \geq \frac{1}{12}$. If $\text{forb}(a) \geq 6$, then by Lemma 5.3(3), $\eta(a) \geq \frac{1}{4}$. Thus, $\mu''(f) \geq \mu'(f) + \eta(a) + \eta(b) \geq (-\frac{1}{3}) + \frac{1}{4} + \frac{1}{12} = 0$ by rule (R1). By symmetry, we may assume $\text{forb}(a), \text{forb}(c) \leq 5$. By Lemma 4.14, without loss of generality, we may assume $\text{forb}(a) = 5$ and $\text{forb}(c) \geq 4$. By Lemma 5.3(1) and (2), $\eta(a) \geq \frac{1}{6}$ and $\eta(c) \geq \frac{1}{12}$. Thus, $\mu''(f) \geq \mu'(f) + \eta(a) + \eta(b) + \eta(c) \geq (-\frac{1}{3}) + \frac{1}{6} + \frac{1}{12} + \frac{1}{12} = 0$ by rule (R1). By the above arguments, we may assume that b has no t_3-neighbor.

Suppose b has a t_2-neighbor. Then, as $\deg(b) = 4$, it follows $\text{forb}(b) \leq 6$. Suppose $\text{forb}(b) = 6$. Then by Lemma 5.4(4), $\eta(b) \geq \frac{1}{3}$. Thus, $\mu''(f) \geq \mu'(f) + \eta(b) \geq (-\frac{1}{3}) + \frac{1}{3} = 0$ by rule (R1). Suppose $\text{forb}(b) = 5$. Then by Lemma 5.4(3), $\eta(b) \geq \frac{1}{4}$. By Lemma 4.14, without loss of generality, we may assume $\text{forb}(a) \geq 4$. By Lemma 5.3(1), $\eta(a) \geq \frac{1}{12}$. Thus, $\mu''(f) \geq \mu'(f) + \eta(a) + \eta(b) \geq (-\frac{1}{3}) + \frac{1}{12} + \frac{1}{4} = 0$ by rule (R1). Suppose $\text{forb}(b) = 4$. Then by Lemma 5.4(2), $\eta(b) \geq \frac{1}{6}$. If $\text{forb}(a) \geq 5$, then by Lemma 5.3(2), $\eta(a) \geq \frac{1}{6}$. Thus, $\mu''(f) \geq \mu'(f) + \eta(a) + \eta(b) \geq (-\frac{1}{3}) + \frac{1}{6} + \frac{1}{6} = 0$ by rule (R1). By symmetry, we may assume $\text{forb}(a), \text{forb}(c) \leq 4$. By Lemma 4.14, $\text{forb}(a) = \text{forb}(c) = 4$. By Lemma 5.3(1), $\eta(a) \geq \frac{1}{12}$ and $\eta(c) \geq \frac{1}{12}$. Thus, $\mu''(f) \geq \mu'(f) + \eta(a) + \eta(b) + \eta(c) \geq (-\frac{1}{3}) + \frac{1}{6} + \frac{1}{12} + \frac{1}{12} = 0$ by rule (R1). By the above arguments, we may assume that b has no t_2- or t_3-neighbors.

Suppose b has a t_{worst}-neighbor. Then as the boundary of a poor face contains no 3-vertex with a 2-neighbor, it follows b is incident with at most two poor faces. Since b has at least two even 4^+-neighbors a and c, and b has no t_2- or t_3-neighbors, $\mu'(b) \geq (2(4) - 6) - (\frac{2}{5}(2)) = \frac{6}{5}$ by rule (V4) and thus $\eta(b) \geq \frac{6}{5} \cdot \frac{1}{2} = \frac{3}{5} > \frac{1}{3}$. Thus, $\mu''(f) \geq \mu'(f) + \eta(b) \geq (-\frac{1}{3}) + \frac{1}{3} = 0$ by rule (R1).

Thus we may assume that b has no t_3-, t_2-, or t_{worst}-neighbors. Then, $\mu'(b) \geq (2(4) - 6) - (\frac{1}{3}(2)) = \frac{4}{3}$ and $\eta(b) \geq \frac{4}{3} \cdot \frac{1}{4} \geq \frac{1}{3}$. Thus, $\mu''(f) \geq \mu'(f) + \eta(b) \geq (-\frac{1}{3}) + \frac{1}{3} = 0$ by rule (R1).

Case 3: b is a 3-vertex. Since b has two 4^+-neighbors, it follows b is either a good 3-vertex or a semi-bad 3-vertex.

Subcase 3.1: Suppose b is a good 3-vertex. Since a and c have t_3-neighbors, then by Corollary 4.12 it follows $\text{forb}(a), \text{forb}(c) \geq 3$. Recall before we split into cases we assumed a and c were 4-vertices. Since $\text{forb}(a) \geq 3$, and it has a t_{good}-neighbor (namely b) and a t_3-neighbor, it follows the most charge a gives is $\mu'(a) \geq (2(4) - 6) - (\frac{5}{6}(2)) = \frac{1}{3}$ by rule (V1) and thus $\eta(a) \geq \frac{1}{3} \cdot \frac{1}{4} = \frac{1}{12}$. By symmetry, $\eta(c) \geq \frac{1}{12}$.

We now show that if a is adjacent to at most one t_3-neighbor, then a is incident to at most 3 poor faces. Indeed, as f is a 10-face and $g(G) \geq 10$, we may assume f contains no cycles in its interior. Since Observation 3.1 implies G has no 1-vertices, it follows the interior of f contains no vertices or edges of G. Thus the other two neighbors of a are not in the interior of f. Let e be the neighbor of b that's not a or c. Let f' be the face containing e, b, a; we show f' is not poor.

Suppose it were. Note that $\deg(e) \geq 3$ as we are in the case when b is good. Since the neighbors of a are not in the interior of f, there exists a neighbor of a, say x, such that x is incident to f'; furthermore, $ebax$ is a path on the boundary of f' and has degree sequence $3^+ - 3 - 4 - \deg(x)$. But as f' is poor, this degree sequence is only possible if x is the endpoint of a 3-thread, contradicting that a has at most one 3-thread. Thus f' is not poor, and so a is incident to at most 3 poor faces. By symmetry, the same is true of c.

If both $\text{forb}(a) = \text{forb}(c) = 3$, then by Lemma 4.16, both a and c are adjacent to at most one t_3-neighbor, and as discussed above both are incident to at most 3 poor faces. Since both a and c are adjacent to at most one t_3-neighbor and at least one t_{good}-neighbor (namely b), it follows for $x \in \{a, c\}$ that x has two other neighbors y and z with $s_x(y) = s_x(z) = 1$ or $s_x(y) = 2$ and $s_x(z) = 0$. Thus $\mu'(x) \geq (2(4) - 6) - (\frac{5}{6} + \frac{2}{3}) = \frac{1}{2}$ by the discharging rules.

As a and c are incident with at most 3 poor faces, it follows $\eta(a), \eta(c) \geq \frac{1}{2} \cdot \frac{1}{3} = \frac{1}{6}$. Thus, $\mu''(f) \geq \mu'(f) + \eta(a) + \eta(c) \geq (-\frac{1}{3}) + \frac{1}{6} + \frac{1}{6} = 0$ by rule (R1).

So assume $\text{forb}(a) \geq 4$ (the case of $\text{forb}(c) \geq 4$ is symmetric). Then as a has a t_3- and t_{good}-neighbor, which have scores 0 and 1 respectively, it follows a has a neighbor x with $s_a(x) = 2$ and a neighbor y with $s_a(y) \geq 1$, and thus contains at most one t_3-neighbor. Therefore, a is incident to at most 3 poor faces. Since $s_a(x) = 2$ and $s_a(y) \geq 1$, it also follows

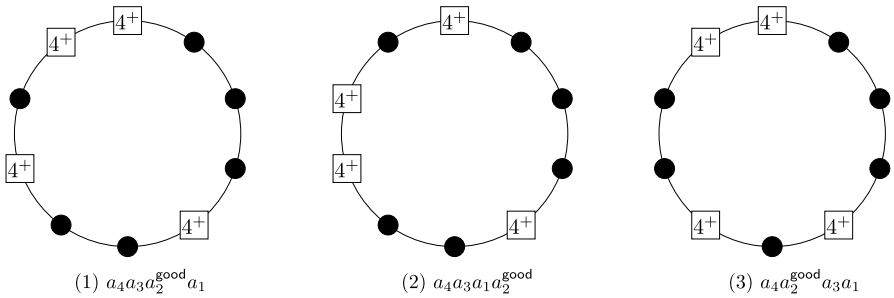

Fig. 8. Faces considered in Claim 5.5.3 with corresponding array representations starting from the top vertex and proceeding clockwise.

$\mu'(a) \geq (2(4)-6) - (\frac{5}{6}+\frac{1}{3}) = \frac{5}{6}$. Thus $\eta(a) \geq \frac{5}{6}\cdot\frac{1}{3} = \frac{5}{18} > \frac{1}{4}$. Recall at the start of Subcase 3.1 we showed $\eta(c) \geq \frac{1}{12}$. Thus, $\mu''(f) \geq \mu'(f) + \eta(a) + \eta(c) \geq (-\frac{1}{3}) + \frac{1}{4} + \frac{1}{12} = 0$ by rule (R1). This completes subcase 3.1.

Subcase 3.2: Suppose b is a semi-bad 3-vertex. By Lemma 4.15, without loss of generality, we may assume $\text{forb}(a) \geq 3$ and $\text{forb}(c) \geq 4$. Note that no poor face has a degree sequence containing $4^+ - 3 - 2$. Thus, as b is a semi-bad 3-vertex, this implies that f is the only poor face that is incident with b. It follows a and c are incident with at most 3 poor faces.

Suppose $\text{forb}(x) \geq 4$ for each $x \in \{a, c\}$. Then as x is incident to at least one t_3-neighbor (namely the 3-thread along the boundary of f), and a $t_{\text{s-bad}}$-neighbor (namely b), it follows x has two neighbors w and y with $s(w) = 2$ and $s(y) \geq 1$. Therefore $\mu'(x) \geq (2(4)-6) - (\frac{5}{6}+\frac{1}{3}+\frac{1}{10}) = \frac{11}{15}$. Since x is incident to at most 3 poor faces, it follows $\eta(x) \geq \frac{11}{45}$. Thus if $\text{forb}(x) \geq 4$ for both $x \in \{a, c\}$, then it follows $\mu''(f) \geq \mu'(f) + \eta(a) + \eta(c) \geq (-\frac{1}{3}) + \frac{11}{45} + \frac{11}{45} \geq 0$. Therefore, as $\text{forb}(c) \geq 4$, we may assume $\text{forb}(a) = 3$.

If $\text{forb}(c) = 4$, then as $\text{forb}(a) = 3$, it follows by Lemma 4.17 that a is adjacent to at most one t_3-neighbor. Also since $\text{forb}(a) = 3$, a has two other neighbors x and y with $s_a(x) = s_a(y) = 1$ or $s_a(x) = 2$, $s_a(y) = 0$. Thus, in both cases, $\mu'(a) \geq (2(4)-6) - (\frac{5}{6}+\frac{2}{3}+\frac{1}{10}) = \frac{2}{5}$. Thus as a is incident to at most 3 poor faces, it follows $\eta(a) \geq \frac{2}{5}\cdot\frac{1}{3} = \frac{2}{15}$. As $\text{forb}(c) = 4$ and c has a t_3- and $t_{\text{s-bad}}$-neighbor, it follows c has two other neighbors x and y with $s_c(x) = 2$ and $s_c(y) \geq 1$, and thus $\mu'(c) \geq (2(4)-6) - (\frac{5}{6}+\frac{1}{3}+\frac{1}{10}) = \frac{11}{15}$ and so $\eta(c) \geq \frac{11}{15}\cdot\frac{1}{3} = \frac{11}{45}$. Thus, $\mu''(f) \geq \mu'(f) + \eta(a) + \eta(c) \geq (-\frac{1}{3}) + \frac{2}{15} + \frac{11}{45} \geq 0$ by rule (R1).

If $\text{forb}(c) \geq 5$, then it has two neighbors x and y with $s_c(x) = 2$ and $s_c(y) = 2$. Thus $\mu'(c) \geq (2(4)-6) - (\frac{5}{6}+\frac{1}{10}) = \frac{16}{15} > 1$ and $\eta(c) \geq \frac{1}{3}$. Thus, $\mu''(f) \geq \mu'(f) + \eta(c) \geq (-\frac{1}{3}) + \frac{1}{3} = 0$ by rule (R1). This completes subcase 3.2.

Therefore, we see in all cases, $\mu''(f) \geq 0$. This completes the proof of Claim 5.5.2. □

Claim 5.5.3. *If f has an array representation that is a permutation of $a_4a_3a_2^{\text{good}}a_1$, then $\mu''(f) \geq 0$.*

Proof. Let f be a poor face with an array representation that is a permutation of $a_4a_3a_2^{\text{good}}a_1$. Then by symmetry, f can be represented by one of the following:

- $a_4a_3a_2^{\text{good}}a_1$
- $a_4a_3a_1a_2^{\text{good}}$
- $a_4a_2^{\text{good}}a_3a_1$.

See Fig. 8.

By rules (F1), (F4), and (F5), $\mu'(f) = (10-6) - (\frac{7}{12}(2) + 1 + \frac{2}{3}(3)) = -\frac{1}{6}$.

By Observation 3.1(3) and Observation 3.7, there exists two adjacent even 4^+-vertices, say a and b, incident with f. Suppose a is a k-vertex, where $k \geq 6$. Since b receives no charge from a, it follows $\mu'(a) \geq (2k-6) - (\frac{5}{6}(k-1)) = \frac{7}{6}k - \frac{31}{6}$ and thus $\eta(a) \geq (\frac{7}{6}k - \frac{31}{6})\frac{1}{k} = \frac{7}{6} - \frac{31}{6k} > \frac{1}{6}$. Thus, $\mu''(f) \geq \mu'(f) + \eta(a) \geq (-\frac{1}{6}) + \frac{1}{6} = 0$ by rule (R1). By symmetry, we may assume that both a and b are 4-vertices.

Suppose a has no t_2- or t_3-neighbors. Then $\mu'(a) \geq (2(4)-6) - (\frac{2}{5}(3)) = \frac{4}{5}$ and $\eta(a) \geq \frac{4}{5}\cdot\frac{1}{4} = \frac{1}{5} > \frac{1}{6}$. Thus, $\mu''(f) \geq \mu'(f) + \eta(a) \geq (-\frac{1}{6}) + \frac{1}{6} = 0$ by rule (R1). By symmetry, we may assume that both a and b have at least one t_2- or t_3-neighbor.

Suppose $\text{forb}(a) \geq 5$. Then by Lemma 5.3(2), $\eta(a) \geq \frac{1}{6}$. Thus, $\mu''(f) \geq \mu'(f) + \eta(a) \geq (-\frac{1}{6}) + \frac{1}{6} = 0$ by rule (R1). By symmetry, we may assume that $\text{forb}(a), \text{forb}(b) \leq 4$.

Suppose both a and b have a t_3-neighbor. By Lemma 4.13, $\text{forb}(a) + \text{forb}(b) \geq 8$, and thus $\text{forb}(a) = \text{forb}(b) = 4$. By Lemma 5.3(1), $\eta(a) \geq \frac{1}{12}$ and $\eta(b) \geq \frac{1}{12}$. Thus, $\mu''(f) \geq \mu'(f) + \eta(a) + \eta(b) \geq (-\frac{1}{6}) + \frac{1}{12} + \frac{1}{12} = 0$ by rule (R1).

So suppose exactly one in $\{a, b\}$ has a t_3-neighbor. Without loss of generality, assume it is a. Note that b has a t_2-neighbor by our previous assumption. If $\text{forb}(b) = 4$, then by Lemma 5.4(2), $\eta(b) \geq \frac{1}{6}$ and $\mu''(f) \geq \mu'(f) + \eta(b) \geq (-\frac{1}{6}) + \frac{1}{6} = 0$. Thus, we may assume that $\text{forb}(b) \leq 3$ by rule (R1). Since a has a t_3-neighbor and b has a t_2-neighbor, then by Lemma 4.13,

$\text{forb}(a) + \text{forb}(b) \geq 7$, and thus $\text{forb}(a) = 4$ and $\text{forb}(b) = 3$. By Lemma 5.3(1) and Lemma 5.4(1), $\eta(a) \geq \frac{1}{12}$ and $\eta(b) \geq \frac{1}{12}$. Thus, $\mu''(f) \geq \mu'(f) + \eta(a) + \eta(b) \geq (-\frac{1}{6}) + \frac{1}{12} + \frac{1}{12} = 0$ by rule (R1).

For the last case, assume both a and b have no t_3-neighbor. Note that both a and b have a t_2-neighbor by our previous assumption. If $\text{forb}(a) = 4$, then by Lemma 5.4(2), $\eta(a) \geq \frac{1}{6}$ and $\mu''(f) \geq \mu'(f) + \eta(a) \geq (-\frac{1}{6}) + \frac{1}{6} = 0$. By symmetry, $\text{forb}(a), \text{forb}(b) \leq 3$ by rule (R1). By Lemma 4.13, $\text{forb}(a) + \text{forb}(b) \geq 6$, and we obtain $\text{forb}(a) = \text{forb}(b) = 3$. By Lemma 5.4(1), $\eta(a) \geq \frac{1}{12}$ and $\eta(b) \geq \frac{1}{12}$. Thus, $\mu''(f) \geq \mu'(f) + \eta(a) + \eta(b) \geq (-\frac{1}{6}) + \frac{1}{12} + \frac{1}{12} = 0$ by rule (R1).

This completes the proof of all the cases in Claim 5.5.3. □

Therefore, every poor face $f \in F(G)$ has nonnegative final charge, that is $\mu''(f) \geq 0$ for all poor faces $f \in F(G)$. This completes the proof of Lemma 5.5. □

6. Proof of Theorem 1.2

We note that we use terminology from §2 and §4 in this section. Before proving the theorem, we need a few observations. Suppose Theorem 1.2 is false; among all counterexamples to Theorem 1.2, let G be one with $|V(G)|$ minimized.

The observation below follows from [4, Lemma 2.1, Lemma 2.3]. While these lemmas are for a graph G that is a minimal counterexample to the statement that all planar graphs with girth at least 12 have $\chi_{\text{pcf}}(G) \leq 4$, the proof of these lemmas do not use the girth condition. Thus the statements are true for a minimal counterexample G to Theorem 1.2 as well.

Observation 6.1. *The following hold for G, where $n_{k^+}(v)$ denotes the number of k^+-neighbors of v:*

(1) G has no 1-vertex.
(2) G has no 3-vertex anchoring a 2^+-thread.
(3) G has no 4^+-thread.
(4) If a 4-vertex v has a t_3-neighbor, then v anchors at most $1 + n_{3^+}(v)$ many 2^+-threads. Thus if v is a 4-vertex with a t_3-neighbor, then the total number of t_3 and t_2-neighbors of v is at most 2.
(5) If a 5-vertex v anchors a 3-thread, then v anchors at most $4 + n_{3^+}(v)$ many 2^+-threads.

As G is connected, every face has a boundary. The following corollary shows the boundary can always be written in terms of arrays (see Definition 2.4).

Corollary 6.2. *The boundary of every face of G has an array representation.*

Proof. By Observation 6.1(1), the degree sequence of any face boundary never contains 1. By 6.1(3), the degree sequence of any face boundary does not contain the subsequence $2 - 2 - 2 - 2$. By Observation 6.1(2), the degree sequence of any face boundary does not contain the subsequence $3 - 2 - 2$. Therefore, the only subsequences the degree sequence of a face boundary can contain are exactly the arrays as defined in Definition 2.4. Thus the degree sequence of every face boundary can be written as a concatenation of arrays. □

We also show a certain structure does not appear in G by using the forb-flex method of §4, namely by slightly modifying the proof of Lemma 4.8.

Observation 6.3. *G contains no 4-vertex with three t_2-neighbors and one t_1-neighbor.*

Proof. Suppose for contradiction $u \in V(G)$ has three t_2-neighbors and one t_1-neighbor. Let φ be a PCF 4-coloring of $G - S[u]$. Then φ is also an odd 4-coloring of $G - S[u]$. Recall by Definition 4.10 and Definition 4.6, $\text{forb}(u) = 1$ and $\text{flex}(u) = 2$. Since $\text{flex}(u) > \text{forb}(u)$, it follows by Corollary 4.11 that φ can be extended to be an odd 4-coloring of all of G. However, by slightly changing the coloring rules used in Lemma 4.8, we claim that φ can actually be extended to a PCF coloring of all of G. Indeed, let $\varphi_*(v)$ be the unique color in the neighborhood of v, should it exist. Then by replacing $\varphi_o(w)$ with $\varphi_*(w)$ in the rules outlined Lemma 4.8, it follows φ is extended to an odd coloring of G such that every vertex in $G - S[u]$ contains a unique color in its neighborhood. Furthermore, by our assumption, $S[u]$ contains only 2- or 4-vertices. As φ is an odd coloring for G, it follows by Lemma 2.7 that each vertex in $S[u]$ contains a unique color in its neighborhood. Thus φ is indeed a PCF coloring of G, completing the proof. □

Finally, we require a definition:

Definition 6.4. Let $v \in V(G)$ be on a 2-thread. We say v is *supported* if its adjacent anchor has a t_1- or t_3-neighbor. Otherwise, we say v is *unsupported*.

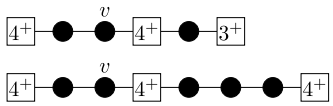

Fig. 9. v supported.

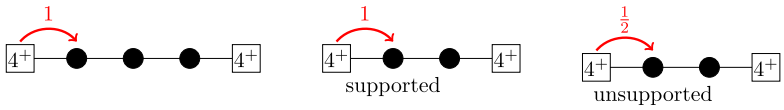

Fig. 10. Vertex discharging rules (V1)-(V3).

See Fig. 9.

We are now ready to prove Theorem 1.2, which we restate below for convenience.

Theorem *(1.2). If G is a planar graph with girth at least* 11, *then* $\chi_{\mathsf{pcf}}(G) \le 4$.

Proof. Suppose for contradiction, the theorem is false. Among all counterexamples, choose a plane graph G such that $|V(G)|$ is minimized. Then G is connected and, as mentioned in the introduction, the results of [4] imply the girth of G is exactly 11.

Let G be drawn in the plane without edge-crossings. Let $F(G)$ be the set of faces of G. Define $\mu : V(G) \cup F(G) \to \mathbb{R}$ by

$$\mu(x) = \begin{cases} 2\deg(x) - 6, & x \in V(G), \\ \ell(x) - 6, & x \in F(G). \end{cases}$$

By Euler's formula,

$$\sum_{x \in V(G) \cup F(G)} \mu(x) = -12.$$

We redistribute the charges as follows (Figs. 10, 11):

Discharging Rules

(V1) Each 4^+-vertex sends charge 1 to its t_3-neighbors.
(V2) Each 4^+-vertex sends charge 1 to its supported t_2-neighbors.
(V3) Each 4^+-vertex sends charge $\frac{1}{2}$ to its unsupported t_2-neighbors.

(F1) Each face sends charge 1 to its incident 2-vertices that are on a 1-thread.
(F2) Each face sends charge $\frac{1}{2}$ to its incident supported 2-vertices, and $\frac{3}{4}$ to its incident unsupported 2-vertices.
(F3) Each face sends charge $\frac{1}{2}$ to incident endpoints of a 3-thread and charge 1 to the middle point.

Let μ' be the final charge after the discharging rules are applied. In §6.1, we show $\mu'(v) \ge 0$ for all $v \in V(G)$. In §6.2, we show $\mu'(f) \ge 0$ for all $f \in F(G)$. Then as

$$0 \le \sum_{x \in V(G) \cup F(G)} \mu'(x) = \sum_{x \in V(G) \cup F(G)} \mu(x) = -12,$$

we obtain a contradiction, completing the proof of Theorem 1.2. □

6.1. Every vertex has nonnegative final charge

Lemma 6.5. *Each vertex has nonnegative final charge. That is, $\mu'(v) \ge 0$ for all $v \in V(G)$.*

Proof. We argue each vertex has nonnegative final charge via a series of claims. Let $v \in V(G)$. Let x_2 and x_3 be the number of t_2- and t_3-neighbors of v, respectively. Note these are the only neighbors that receive a charge from v.

Claim 6.5.1. *If* $\deg(v) \ge 6$, *then* $\mu'(v) \ge 0$.

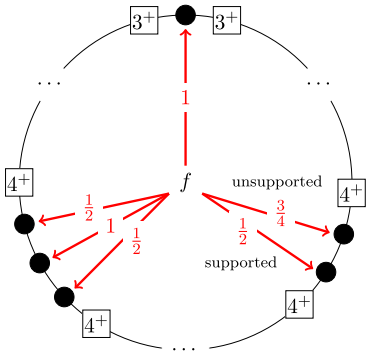

Fig. 11. Face discharging rules (F1) - (F3).

Proof. As v sends charge at most 1 to any of its neighbors, it follows $\mu'(v) = (2\deg(v) - 6) - (\deg(v)) = \deg(v) - 6 \geq 0$. □

Claim 6.5.2. *If* $\deg(v) = 5$, *then* $\mu'(v) \geq 0$.

Proof. First Suppose $x_3 \geq 1$. Then by Observation 6.1(5), $x_2 + x_3 \leq 4 + n_{3^+}(v)$, and it follows by degree restrictions that $x_2 + x_3 \leq 4$. Since v at most charge 1 to any neighbor, it follows $\mu'(v) \geq (2(5) - 6) - (4(1)) = 0$ by rules (V1) and (V2).

Now suppose $x_3 = 0$. If $x_2 \leq 4$, then as v sends at most 1 to each by rule (V2), it follows $\mu'(v) \geq (2(5) - 6) - (4(1)) \geq 0$. So we may assume $x_2 = 5$. Then v has no t_1- or t_3-neighbor, and thus none of v's t_2-neighbors are supported. Therefore, v sends at most $\frac{1}{2}$ to each of its neighbors by rule (V3), and thus $\mu'(v) \geq (2(5) - 6) - (\frac{1}{2}(5)) \geq 0$. □

Claim 6.5.3. *If* $\deg(v) = 4$, *then* $\mu'(v) \geq 0$.

Proof. First suppose $x_3 \geq 1$. By Observation 6.1(4), $x_2 + x_3 \leq 2$. As v sends at most 1 charge to each t_2- or t_3-neighbor by rules (V1) and (V2), it follows $\mu'(v) \leq (2(4) - 6) - (1(2)) = 0$.

Now suppose $x_3 = 0$. If $x_2 = 4$, then all of v's neighbors are unsupported, and thus v gives charge at most $\frac{1}{2}$ to each by rule (V3). Therefore, $\mu'(v) \geq (2(4) - 6) - (\frac{1}{2}(4)) = 0$. If $x_2 \leq 2$, then as v sends charge at most 1 to each of these neighbors by rule (V2), it follows $\mu'(v) \geq (2(4) - 6) - (1(2)) = 0$. Thus assume $x_2 = 3$. If none of these three 2-neighbors are supported, then v sends at most $\frac{1}{2}$ to each by rule (V3), and thus $\mu'(v) \geq (2(4) - 6) - (\frac{1}{2}(3)) \geq 0$. Therefore, we may assume at least one of v's t_2-neighbors is supported which means v must also have a t_1-neighbor. However, this is not possible by Observation 6.3. □

Claim 6.5.4. *If* $\deg(v) \leq 3$, *then* $\mu'(v) \geq 0$.

Proof. By Observation 6.1(1), $\deg(v) \geq 2$. If $\deg(v) = 3$, then v doesn't participate in any discharging rules, and thus its charge is $\mu'(v) = 2(3) - 6 = 0$. So we assume $\deg(v) = 2$. Then we argue that v cannot be a cut-vertex. To see this, consider the proof of Observation 3.3 also works in the setting of PCF coloring. Therefore, v is incident to two different faces.

Suppose v is on a 1-thread. As it receives charge $\frac{1}{2}$ from each of its incident faces by rule (F1), $\mu'(v) \geq (2(2) - 6) + (\frac{1}{2}(2)) \geq 0$.

Suppose v is on a 2-thread. If v is an unsupported vertex, it receives $\frac{3}{4}$ from each of its incident faces by rule (F2), and $\frac{1}{2}$ from its neighboring anchor by rule (V3). Thus $\mu'(v) \geq (2(2) - 6) + (\frac{3}{4}(2) + \frac{1}{2}(1)) = 0$. If v is supported, then it receives $\frac{1}{2}$ from each face by rule (F2), and 1 from its neighboring anchor by rule (V2), and thus $\mu'(v) \geq (2(2) - 6) + (\frac{1}{2}(2) + 1(1)) = 0$.

Suppose v is on a 3-thread. If v is the middle vertex, then it receives 1 from each face by rule (F3), and so $\mu'(v) \geq (2(2) - 6) + (1(2)) = 0$. If v is an endpoint, it receives $\frac{1}{2}$ from each face by rule (F3) and 1 from its neighboring anchor by rule (V1), and thus $\mu'(v) \geq (2(2) - 6) + (\frac{1}{2}(2) + 1(1)) = 0$.

Since there are no 4^+-threads (Observation 6.1(3)), this covers all cases and completes the claim. □

Thus, in all cases, $\mu'(v) \geq 0$. This completes the proof of Lemma 6.5. □

6.2. *Every face has nonnegative final charge*

In the following proof, we consider the average charge a face gives to each vertex in an array based on rules (F1) - (F3). Note a_3 receives a different average charge depending on the number of supported 2-vertices ($\frac{1}{2}$ if both are unsupported, $\frac{5}{12}$ if exactly one is supported, and $\frac{1}{3}$ if both are supported). See Fig. 12.

Array	Degree Sequence	Average Charge Received per Vertex
a_4	$\boxed{4^+ - 2 - 2 - 2} - 4^+$	$\frac{1}{2}$
a_3	$\boxed{4^+ - 2 - 2} - 4^+$	$\frac{1}{2}$, $\frac{5}{12}$, or $\frac{1}{3}$
a_2	$\boxed{3^+ - 2} - 3^+$	$\frac{1}{2}$
a_1	$\boxed{3^+} - 3^+$	0

Fig. 12. Average charge received per vertex from a face.

Lemma 6.6. *Each face has nonnegative final charge. That is $\mu'(f) \geq 0$ for all $f \in F(G)$.*

Proof. We argue each face has nonnegative final charge via a series of claims. Since G has girth 11, $\ell(f) \geq 11$. Recall that the initial charge of a face is $\mu(f) = \ell(f) - 6$. Also recall by Corollary 6.2, every vertex of f is contained in some array.

Claim 6.6.1. *If $\ell(f) \geq 12$, $\mu'(f) \geq 0$.*

Proof. Suppose f is a 12^+-face. Since the maximum average charge given to a vertex is $\frac{1}{2}$, we have $\mu'(f) \geq (\ell(f) - 6) - (\frac{1}{2}\ell(f)) \geq 0$. □

Claim 6.6.2. *If $\ell(f) = 11$, $\mu'(f) \geq 0$.*

Proof. Suppose f is an 11-face. Fix an array representation of f. Let x_i denote the number of a_i arrays in an array representation of f for $i \in [4]$, and let s denote the number of supported vertices incident to f.

Suppose $s \geq 2$. If two supported vertices are adjacent, then f contains an a_3, which receives an average of $\frac{1}{3}$ per vertex. Since all the other arrays of f's boundary receive at most $\frac{1}{2}$ average charge, it follows $\mu'(f) \geq (11 - 6) - (\frac{1}{2}(8) + \frac{1}{3}(3)) = 0$. If two supported vertices are not adjacent, then f contains at least two a_3 arrays which receive an average charge of at most $\frac{5}{12}$. Thus $\mu'(f) \geq (11 - 6) - (\frac{1}{2}(5) + \frac{5}{12}(6)) = 0$. Therefore we may assume f contains at most one supported vertex, i.e., $s \leq 1$.

Suppose $x_1 \geq 1$. Since a_1 receives an average charge of 0, and the other arrays on f's boundary receive an average charge of at most $\frac{1}{2}$, it follows $\mu'(f) \geq (11 - 6) - (\frac{1}{2}(7) + \frac{5}{12}(3)) \geq 0$. So we assume $x_1 = 0$. We now split into cases based on the value of x_4. Note $x_4 \leq 2$ since $\ell(f) = 11$.

Case 1: $x_4 = 2$. If the array representation of f contains a_4 twice, but no a_1, then the array representation of f must be a permutation of a_4, a_4, a_3. However, in this case, both 2-vertices represented by the a_3 are supported since both are neighbors to anchors of 3-threads. This contradicts the assumption that $s \leq 1$. Thus $x_4 \neq 2$.

Case 2: $x_4 = 1$. Since $\ell(f) = 11$ and the array representation of f contains one a_4, but no a_1, by parity arguments, $x_3 = 1$. However, if $x_3 = 1$, then the array representation of f is some permutation of a_4, a_3, a_2, a_2, and regardless of the permutation, both 2-vertices of the a_3 are supported since both are neighbors to anchors of 1- or 3-thread. This contradicts the assumption that $s \leq 1$. Thus $x_4 \neq 1$.

Case 3: $x_4 = 0$. Since $\ell(f) = 11$ and the array representation of f contains neither a_4 nor a_1, by parity arguments, $x_3 \in \{1, 3\}$. If $x_3 = 1$ then the array representation of f is some permutation of a_3, a_2, a_2, a_2, a_2, and regardless of the permutation, both 2-vertices of the a_3 are supported since both are neighbors to anchors of 1-threads. This contradicts $s \leq 1$ and hence we may assume that $x_3 = 3$. In this case, the array representation of f is some permutation of a_3, a_3, a_3, a_2. Since f contains exactly one 1-thread, both of its anchors are also anchors of distinct 2-threads. Thus, both of the 2-threads have at least one supported vertex each, contradicting the assumption that $s \leq 1$. Thus, $x_4 \neq 0$. This covers all cases and completes the claim. □

By the two claims above, it follows $\mu'(f) \geq 0$ for all $f \in F(G)$. □

Declaration of competing interest

The authors have no conflicts of interest.

Acknowledgements

This work was initiated at the 2023 Graduate Research Workshop in Combinatorics, which was supported in part by NSF grant #1953985 and a generous award from the Combinatorics Foundation. We are also grateful to the University of Wyoming for their hospitality during this workshop. The work of James Anderson was partially supported by the NSF CAREER grant DMS-2239187 (PI: Anton Bernshteyn). The work of Eun-Kyung Cho was supported by Basic Science Research Program through the National Research Foundation of Korea (NRF) funded by the Ministry of Education (No. RS-2023-00244543). The work of Emily Heath was partially supported by NSF RTG Grant DMS-1839918. The work of Hyemin Kwon was supported by the framework of international cooperation program managed by the National Research Foundation of

Korea (NRF-2023K2A9A2A06059347). The work of Zhiyuan Zhang was supported by the Ontario Graduate Scholarship (OGS) Program and partially supported by the NSERC under Discovery Grant (No. 2019-04269). We also thank the developers of Sagemath [19], which we used for preliminary explorations. Finally, we thank the referees for their careful reading and useful comments.

Data availability

No data was used for the research described in the article.

References

[1] Jungho Ahn, Seonghyuk Im, Sang-il Oum, The proper conflict-free k-coloring problem and the odd k-coloring problem are NP-complete on bipartite graphs, arXiv:2208.08330, 2022.
[2] Yair Caro, Mirko Petruševski, Riste Škrekovski, Remarks on odd colorings of graphs, Discrete Appl. Math. 321 (2022) 392–401.
[3] Yair Caro, Mirko Petruševski, Riste Škrekovski, Remarks on proper conflict-free colorings of graphs, Discrete Math. 346 (2) (2023) 113221, 14.
[4] Eun-Kyung Cho, Ilkyoo Choi, Hyemin Kwon, Boram Park, Proper conflict-free coloring of sparse graphs, arXiv:2203.16390, 2022.
[5] Eun-Kyung Cho, Ilkyoo Choi, Hyemin Kwon, Boram Park, Brooks-type theorems for relaxations of square colorings, arXiv:2302.06125, 2023.
[6] Eun-Kyung Cho, Ilkyoo Choi, Hyemin Kwon, Boram Park, Odd coloring of sparse graphs and planar graphs, Discrete Math. 346 (5) (2023) 113305, 7.
[7] Eun-Kyung Cho, Ilkyoo Choi, Bernard Lidický, Relaxation of Wegner's Planar Graph Conjecture for maximum degree 4, arXiv:2212.10643, 2022.
[8] Daniel W. Cranston, Odd colorings of sparse graphs, arXiv:2201.01455, 2022.
[9] Daniel W. Cranston, Michael Lafferty, Zi-Xia Song, A note on odd colorings of 1-planar graphs, Discrete Appl. Math. 330 (2023) 112–117.
[10] Tianjiao Dai, Qiancheng Ouyang, François Pirot, New bounds for odd colourings of graphs, arXiv:2306.01341, 2023.
[11] Igor Fabrici, Borut Lužar, Simona Rindošová, Roman Soták, Proper conflict-free and unique-maximum colorings of planar graphs with respect to neighborhoods, Discrete Appl. Math. 324 (2023) 80–92.
[12] Mateusz Kamyczura, Jakub Przybyło, On conflict-free proper colourings of graphs without small degree vertices, Discrete Math. 347 (1) (2024) 113712, 6.
[13] Chun-Hung Liu, Proper conflict-free list-coloring, odd minors, subdivisions, and layered treewidth, Discrete Math. 347 (1) (2024) 113668, 16.
[14] Chun-Hung Liu, Bruce Reed, Asymptotically optimal proper conflict-free colouring, arXiv:2401.02155, 2024.
[15] Runrun Liu, Weifan Wang, Gexin Yu, 1-planar graphs are odd 13-colorable, Discrete Math. 346 (8) (2023) 113423, 7.
[16] Jan Petr, Julien Portier, The odd chromatic number of a planar graph is at most 8, Graphs Comb. 39 (2) (Mar. 2023).
[17] Mirko Petruševski, Riste Škrekovski, Colorings with neighborhood parity condition, Discrete Appl. Math. 321 (2022) 385–391.
[18] Mengke Qi, Xin Zhang, Odd coloring of two subclasses of planar graphs, arXiv:2205.09317, 2022.
[19] Sage Developers, The, SageMath, the Sage Mathematics Software System (Version 10.0), https://www.sagemath.org, 2023.
[20] Tao Wang, Xiaojing Yang, On odd colorings of sparse graphs, arXiv:2212.06563, 2022.
[21] Douglas B. West, Introduction to Graph Theory, Prentice Hall, Inc., Upper Saddle River, NJ, ISBN 0-13-227828-6, 1996, pp. xvi+512.